This is a digital copy of a book that was preserved for generations on library shelves before it was carefully scanned by Google as part of a project to make the world's books discoverable online.

It has survived long enough for the copyright to expire and the book to enter the public domain. A public domain book is one that was never subject to copyright or whose legal copyright term has expired. Whether a book is in the public domain may vary country to country. Public domain books are our gateways to the past, representing a wealth of history, culture and knowledge that's often difficult to discover.

Marks, notations and other marginalia present in the original volume will appear in this file - a reminder of this book's long journey from the publisher to a library and finally to you.

Usage guidelines

Google is proud to partner with libraries to digitize public domain materials and make them widely accessible. Public domain books belong to the public and we are merely their custodians. Nevertheless, this work is expensive, so in order to keep providing this resource, we have taken steps to prevent abuse by commercial parties, including placing technical restrictions on automated querying.

We also ask that you:

+ *Make non-commercial use of the files* We designed Google Book Search for use by individuals, and we request that you use these files for personal, non-commercial purposes.

+ *Refrain from automated querying* Do not send automated queries of any sort to Google's system: If you are conducting research on machine translation, optical character recognition or other areas where access to a large amount of text is helpful, please contact us. We encourage the use of public domain materials for these purposes and may be able to help.

+ *Maintain attribution* The Google "watermark" you see on each file is essential for informing people about this project and helping them find additional materials through Google Book Search. Please do not remove it.

+ *Keep it legal* Whatever your use, remember that you are responsible for ensuring that what you are doing is legal. Do not assume that just because we believe a book is in the public domain for users in the United States, that the work is also in the public domain for users in other countries. Whether a book is still in copyright varies from country to country, and we can't offer guidance on whether any specific use of any specific book is allowed. Please do not assume that a book's appearance in Google Book Search means it can be used in any manner anywhere in the world. Copyright infringement liability can be quite severe.

About Google Book Search

Google's mission is to organize the world's information and to make it universally accessible and useful. Google Book Search helps readers discover the world's books while helping authors and publishers reach new audiences. You can search through the full text of this book on the web at `http://books.google.com/`

Sci 7180.155

HARVARD UNIVERSITY.

Bought
with an appropriation made by
the Corporation
for books in Engineering.

Received 22 March, 1901.

SCIENCE CENTER LIBRARY

TRANSACTIONS

OF

The Institution of Engineers and Shipbuilders

IN SCOTLAND

(INCORPORATED).

VOLUME XXXVII.

THIRTY-SEVENTH SESSION,
1893-94.

EDITED BY THE SECRETARY.

GLASGOW:
PRINTED FOR THE INSTITUTION BY
WILLIAM ASHER, 80 GORDON STREET.
1894.

Sci [illegible]0.1[illegible]6

MAR 22 1901
LIBRARY.

Engin. Appropr

OFFICE-BEARERS.

THIRTY-SEVENTH SESSION, 1893-94.

President.

JOHN INGLIS.

Vice-Presidents.

DAVID J. DUNLOP. ANDREW S. BIGGART.
GEORGE RUSSELL.

Councillors.

ROBERT. T. NAPIER.
JAMES ROWAN.
WILLIAM M'WHIRTER.
SINCLAIR COUPER.
PROF. J. HARVARD BILES.
PROFESSOR BARR, D.Sc.
JAMES MOLLISON.
MATTHEW HOLMES.
PROFESSOR JAMIESON.
CHARLES P. HOGG.

Finance Committee.

JOHN INGLIS, PRES., *Convener.*
A. S. BIGGART.
GEORGE RUSSELL.
JAMES MOLLISON.

Library Committee.

PROF. BARR, HON. LIB., *Convener.*
SINCLAIR COUPER.
CHARLES P. HOGG.
JAMES ROWAN.

Committee on Papers.

JOHN INGLIS. A. S. BIGGART. SINCLAIR COUPER.

Honorary Councillors—Past Presidents.

JAMES M. GALE.
DAVID ROWAN.
HAZELTON R. ROBSON.
JAMES REID.
ROBERT DUNDAS.

Honorary Treasurer.—JAMES M. GALE, City Chambers, John Street.

Secretary and Editor of Transactions. } W. J. MILLAR, Institution Rooms, 207 Bath Street.

Honorary Librarian.—PROFESSOR BARR, D.Sc., Glasgow University.

Curator and Librarian—FRANCIS MARTIN, Institution Rooms, 207 Bath Street.

Presidents of the Institution

Since Foundation in 1857.

1857-59 WILLIAM JOHN MACQUORN RANKINE, C.E., LL.D., F.R.SS.L. & E., Professor of Civil Engineering and Mechanics, Glasgow University.

1859-61 WALTER MONTGOMERIE NEILSON, Hyde Park Locomotive Works, Glasgow.

1861-63 WILLIAM JOHNSTONE, C.E., Resident Engineer, Glasgow & South-Western Railway, Glasgow.

1863-65 JAMES ROBERT NAPIER, Engineer and Shipbuilder, Glasgow.

1865-67 JAMES GRAY LAWRIE, Engineer and Shipbuilder, Glasgow.

1867-69 JAMES MORRIS GALE, C.E., Engineer, Glasgow Corporation Water Works.

1869-70 WILLIAM JOHN MACQUORN RANKINE, C.E., LL.D., F.R.SS.L. & E., Professor of Civil Engineering and Mechanics, Glasgow University.

1870-72 DAVID ROWAN, Marine Engineer, Glasgow.

1872-74 ROBERT DUNCAN, Shipbuilder, Port-Glasgow.

1874-76 HAZELTON ROBSON ROBSON, Marine Engineer, Glasgow.

1876-78 ROBERT BRUCE BELL, C.E., Civil Engineer, Glasgow.

1878-80 ROBERT MANSEL, Shipbuilder, Glasgow.

1880-82 JOHN LENNOX KINCAID JAMIESON, Marine Engineer, Glasgow.

1882-84 JAMES REID, Hyde Park Locomotive Works, Glasgow.

1884-86 JAMES THOMSON, LL.D., F.R.S., Professor of Civil Engineering and Mechanics, Glasgow University.

1886-87 WILLIAM DENNY, Shipbuilder, Dumbarton.

1887-89 ALEXANDER CARNEGIE KIRK, LL.D., Marine Engineer, Glasgow.

1889-91 EBENEZER KEMP, Marine Engineer, Glasgow.

1891-93 ROBERT DUNDAS, C.E., Resident Engineer Southern Division, Caledonian Railway, Glasgow.

Elected
April 25, 1893 JOHN INGLIS, Engineer and Shipbuilder, Glasgow.

CONTENTS.

THIRTY-SEVENTH SESSION, 1893-94.

Page

Office-Bearers, ... iii

PAPERS READ.

Address by the President—Mr John Inglis, ... 1

On A Percussive Tool for Caulking, Chipping, Mining, etc.—by Mr J. MacEwan Ross, ... 25

,, The Strength of Large Ships—by Professor J. Harvard Biles, . 39

,, The Effect of Reversing the Screw Propeller of a Steamship upon the Steering—by Captain John Bain, ... 75

,, Rotatory and Re-action Engines—by Mr Alexander Morton, . 91

,, Automatic Adjustments for Bearings—by Mr W. A. M'William, 121

,, An Overhead Power Travelling Crane—by Mr George Russell, . 131

,, The Glasgow Corporation Electric Light Supply—by Mr William Arnot, Assoc.M.Inst.C.E., ... 145

James Watt Anniversary Dinner, ... 177

Minutes of Proceedings, ... 179

Treasurer's Statement, ... 188

Obituary, ... 195

Report of the Library Committee, ... 199

Donations to Library, ... 199

New Books Added to Library, ... 201

List of Members, ... 207

Index, ... 249

PLATES.

Strength of Large Ships,	I., II., III.
Rotatory and Re-action Engines,	IV., V., VI.
Automatic Bearing Adjustment, etc.,	VII.
Overhead Power Travelling Crane,	VIII., IX.
The Glasgow Corporation Electric Light Supply,	X., XI., XII., XIII.

Premiums Awarded

FOR

PAPERS READ DURING SESSION 1892-93.

THE MARINE ENGINEERING MEDAL

To Mr Sinclair Couper, for his paper on "The Return Tubular Marine Boiler for High Pressures."

PREMIUMS OF BOOKS

To Mr John Barr, for his paper on "Testing Machinery and Electric Water Level Recording Apparatus."

To Mr W. Carlile Wallace, for his paper on "Some Causes of Failure in Tunnel Shafting."

The responsibility of the statements and opinions given in the following Papers and Discussions rests with the individual authors; the Institution, as a body, merely places them on record.

INSTITUTION
OF
ENGINEERS AND SHIPBUILDERS
IN SCOTLAND.
(INCORPORATED.)

THIRTY-SEVENTH SESSION, 1893-94.

Inaugural Address.

By Mr JOHN INGLIS, *President.*

Read 24th October, 1893.

GENTLEMEN—

I have to express my grateful sense of the honour you have conferred on me in electing me to the Presidential Chair, which has had so many distinguished occupants in the past.

My first impulse was rather to shrink from the prominence to which I felt I had no valid title, but, on second thoughts, I deemed it ungracious not to accede to the flattering invitation, and I have done so trusting to your generous forbearance towards any shortcomings of mine in the performance of the duties of the office.

I am able to congratulate you on the extension of the membership and influence of the Institution, our total numbers being now 724, the highest on the roll since our foundation.

The membership is classified as follows:—

10	Honorary Members,
19	Life Members,
438	Ordinary Members,
32	Associates, and
225	Graduates.
Total, 724	

During last Session there were added:—

27 Ordinary Members,
4 Associates, and
33 Graduates.

64

in all, and while it is gratifying to record so large an addition to our numbers, I would suggest to you that there are still many names in this great industrial centre which might be inscribed on our roll, and probably would be if the claims of the Institution upon the support of the profession were urged by our Members when they have convenient opportunity.

We have to deplore the removal by death of seven Members and Graduates, short notices of whose career have been prepared by the Secretary, and will be found in the last volume of the Transactions.

Of Ordinary Members we have lost Mr William Aiton, of Peterhead, formerly a well known contractor for important engineering works; Mr David C. Glen, whose name is associated with engineering and mineralogical pursuits; Mr Laurence Hill, formerly shipbuilder at Port-Glasgow; Mr Robert G. Thomson, formerly an engineer in the Russian service; and Mr W. S. Cumming, shipbuilder, Inverkeithing. And from the Graduate Section, Mr James L. Macfarlane and Mr E. S. Paterson.

While I have, with perfect sincerity, expressed my grateful recognition of the honour you have done me, I need not disguise from you that I find it an honour which carries with it a considerable amount of embarrassment, as there appears to be a rule—the rigour of which cannot be relaxed—that the President of this Society shall, at the beginning of the Session, deliver an inaugural address.

There is probably no ordeal which, for me, possesses such terrors as to be obliged, having nothing particular to say, to frame a prelection which shall furnish evidence of that dearth of material to which, at the very outset, I have confessed.

There are those fortunate persons endowed with the gift of the eminent Irish churchman who could discourse elegantly about a broomstick, or of the equally eminent Scots divine whose pronouncement of the blessed word Mesopotamia could not be heard without deep emotion; but I, for one, have not found the cultivation of these arts and graces compatible with the practice of the craft and mystery of shipbuilding.

Reference to the proceedings of this and kindred societies shows that a favourite type of Presidential Address is the historical or reminiscent, and considering that some of your former Presidents were able to recall almost the very beginning of marine engineering, and were themselves, to some extent, the makers of the history of steamship building, it is not surprising that their reminiscences were extremely interesting. But, although my own recollections go back for a generation, I cannot hope that they would enlist your sympathies as did those traditions of the elders when they were delivered to you from the very lips of the elders themselves; and a summary of the engineering works of the year is apt to savour strongly of extracts from the technical journals.

The temptation to take up a particular subject on which one fancies he can say something is almost irresistible, but I am not clear that it is quite fair so to invade the territory of the Members who contribute papers at our regular meetings, especially as the President's lucubration is, by courtesy, exempt from discussion, and his statements or opinions might pass unquestioned, and be so recorded, when criticism might have exposed weakness or fallacies.

It is almost too late to offer a catalogue of suggestions on the procedure of an Institution, now in its thirty-seventh session, and it might be presumptuous on the part of one who has admitted his own difficulties in the choice of subjects.

It is, in fact, only too easy to declare what is unsuited to the present occasion, but it is also unprofitable beyond a certain point. and I must offer simply some remarks, however disjointed, on things recently in my own thoughts.

Presidential addresses, when dealing with things mechanical, seem

to me to frequently reveal, in reviewing the past, a certain complacency which is conspicuous by its absence from most speeches or writings on social, ethical, or artistic subjects. Early attempts, particularly in steam locomotion by land or sea, are contrasted with the achievements of our own day, generally with a sort of amused pity for the shortcomings of our mechanical ancestors, and contempt for the timidity and want of ambition in their forecasts.

As the present year of grace happens to be the hundredth since the birth of one of the lesser lights of science, Dr Dionysius Lardner, I am reminded that his memory has come in for more aspersion than is, I think, quite fair, on account of his supposed attempts to fill the risky rôle of prophet before the event. Our own Transactions contain at least one allusion to an alleged prediction by Lardner of the impossibility of successfully navigating a ship between England and America under steam alone, and, as it has always struck me as a strange thing that any man with scientific habits of thought should so commit himself by setting bounds to invention, I have been at some pains to search for the actual utterance of the learned doctor to that effect, but, as yet, without being able to find it.

There is, to be sure, still extant a report in the *Liverpool Albion* newspaper, of 14th December, 1835, of a speech by Dr Lardner, in which he is represented as having said that "A voyage from New York to Liverpool was as chimerical as a voyage from New York or Liverpool to the moon;" but although now-a-days every one, except, perhaps, here and there a too-loquacious politician, considers his newspaper a treasure of veracity, we are by no means certain that in 1835 the art of reporting had attained its present state of perfection, and I am disposed to think no such words were ever spoken at all.

In this author's lectures on the steam engine, published in 1828, a work by no means inaccessible, the following passage occurs:— "In 1812 steam vessels were first produced upon the Clyde, and since that period steam navigation has rapidly extended, so that at present there is scarcely a part of the civilised globe to which it has

not found its way. The Atlantic and Pacific oceans have been traversed by its powers, and if the prolific results of human invention should suggest means of diminishing the consumption of fuel, or obtaining a supply of heat from materials sufficiently small and light, it would be hard to assign limits to the powers of this most wonderful agent."

Considering that at the date of these lectures steam navigation had not attained its majority, this forecast should have saved Lardner from the lapidation due to the false prophet. Our horizon may be wider than his, as the child on the shoulders of a giant may see further than his bearer; but we are hardly entitled to boast of our superior vision.

In 1836 Dr Lardner, at a meeting of the British Association, publicly denied that he had ever called an Atlantic steam voyage a physical impossibility, but affirmed that long sea voyages could not, in the then state of the art of steamship building, be maintained successfully without a subsidy, and immediately succeeding events proved that he was right.

It is almost a case of extremes meeting to find in the present year, more than half-a-century after these remarks of Lardner's were uttered, the President of the Institution of Naval Architects, Lord Brassey, urging the payment of increased subsidies to fast steamers, lest all the ocean steaming at high speed should come to be performed by foreign vessels, our own being unable to compete without State aid. It would seem as if the continuous efforts of engineers towards mechanical improvement, and the attainment of ever increasing speeds at sea, have resulted in keeping the margin of profits to the owner of fast steamships so dangerously near to zero that, to preserve him in existence, the State aid which was obviously necessary in the infancy of steam navigation cannot yet be dispensed with. Our patriotism (and thrift) may derive satisfaction from the consideration that our mail services are more cheaply performed than those of foreign nations, but still the British taxpayer is not yet relieved of all charge for the speedy conveyance of letters, and apparently, in Lord Brassey's opinion, he

does not pay nearly enough for this, and ought besides to pay for the running of fast steamers irrespective of the performance of any mail service.

The aggregate sum paid in subsidies by Great Britain, France, Germany, Russia, and Italy is £3,331,513, of which we pay £637,000, or nearly 20 per cent. The foreign trade of these five great countries amounts to £1,646,000,000, of which our proportion is 45 per cent., or £740,000,000.

Another mode of comparison shows that the four foreign countries quoted pay for mail service a sum which bears to their total import and export trade the ratio of 1 to 336, while in the case of our own country the ratio is 1 to 1161.

In addition to the sum of over £1,000,000 sterling paid by France in mail subsidies, the premium or bounty for navigation will under the new laws amount to a further annual sum of about £360,000. The French Transatlantic Company, with £1,600,000 capital, and 167,000 tons of shipping, absorbs subsidies amounting to £446,320, and only distributes in dividends about £80,000 annually, less than one-fifth of the State aid. The Messageries Maritimes has £2,400,000 of capital, 202,000 tons of shipping, and is subsidised to the extent of £554,000 a year. The annual payment as dividend to shareholders is about £120,000. In France, then, at all events, we find that steam navigation is still the tender nursling of 1836.

In Germany the premier shipowning concern is the North German Lloyds, with a capital of £2,000,000 sterling and a fleet of 197,000 tons. Notwithstanding its subsidy of £220,000 a year, the available profits last year only amounted to £30,000, or 1½ per cent. on the capital, and the year previous there was a debit balance of £158,000, equal to 8 per cent. on the capital.

This unfortunate state of things was explained by the loss of the steamer "Eider," but as the company had been singularly exempt from serious casualties for many years, it would appear as if previous dividends had been the result of a successful marine insurance business rather than of legitimate shipowning, and that,

in the underwriting account, adequate provision had not been made for the losses which in all such ventures must come sooner or later.

To deal briefly with the affairs of some of the great shipowning companies trading from our own shores, I find that the last year's accounts of the following show profits to a greater or less extent—viz., the P. & O. Company, with £2,320,000 capital, has declared profits of £139,800; the Cunard Company, with £1,600,000 capital, £6,914 profits—6s 9d per cent.; the Royal Mail Steam Packet Company, with £900,000 capital, rejoices in £302 profit—equal to 8d per cent.; and the Shaw Savill and Albion Company, with £466,420 capital, distributes £12,070 profit. The total capital embarked in these four companies is £5,286,420, and the aggregate profits £159,086, or a little over 3 per cent. This can hardly be called a handsome return, considering that the P. & O. Company receives from the British Government the annual sum of £340,000 as mail subsidy, the Cunard Company about £50,000, and the Royal Mail Company over £90,000, the precise total for the four companies being £482,303.

The following have made serious losses, viz.:—The Union Company, capital £698,410, has a debit balance of £69,048; the Castle Packet Company, with £504,000 capital, £40,000 loss; the Orient Company, £466,000 capital, £43,000 loss; and the Pacific Steam Navigation, with £1,477,125 capital, £57,238 loss.

The capital of these four companies amounts to £3,145,535, and their losses for the year to £209,286, or over 6½ per cent. The payments by the British Government for mail services to the Union and Castle Companies are trifling, but the Orient Company receives over £85,000, and the Pacific Company about £20,000.

Here, then, we have eight companies, representing about 8½ millions sterling of capital, whose business altogether results in a loss of over £50,000 in one year, notwithstanding the receipt of £589,107 in subsidies.

In addition to the Post-Office subsidies, there are Admiralty subventions to the Cunard Co. of about £13,500 per annum, and

to the P. and O. Company of £12,394 11s 9d. This brings up the total excess of expenditure over receipts, in the running of these eight lines of steamers, to £665,200.

I have no means of determining if these companies have any considerable cash reserves, but, if they have, these are probably overbalanced by the sum of £650,000 which one of the older Atlantic companies has written off as irrecoverable loss.*

The operations of the companies cited are probably less affected by the fluctuations in cargo freights than those of the majority of shipowners, and it is difficult to avoid the conclusion that much of the disastrous result may be due to more rapid advance in speed than the conditions of the employment of the vessels warrant, or to some other defect in the adaptation of them to the intended purpose.

Crossing the Atlantic in five days and such like achievements may be magnificent, but they are not business, and the prosperity of the shipbuilding industry is so dependent on the success of the shipowner that there is reason for grave anxiety in the perusal of such accounts as I have quoted.

Mr Ruskin has, in a characteristic manner, described the railway through a certain picturesque district of England as a means whereby every fool in Buxton can be at Bakewell in half an hour, and every fool in Bakewell at Buxton. It is, perhaps, rather sweeping to say that every one in a hurry is foolish, but the commercial result of fast travelling by sea is such as to lead us to seriously consider whether there is really wisdom in providing the costly means of so much expedition.

At all events, in the face of that result, it is certainly premature for ambitious naval architects to discuss vessels of vastly greater dimensions, powers, and speed than those as yet hardly out of the experimental stage, to be built of new and strange materials,

---

* *Note.*—The particulars of subsidies, etc., were in part taken from Lord Brassey's paper, and in part kindly supplied to me by Mr Parker-Smith, M.P. I have to thank M. Daymard, of Paris, for information as to foreign steamship lines, and Mr D. Croll, of Rotterdam, for a copy of Mr Roentgen's patent specification.

necessitating harbour works on a colossal scale and of prodigious cost. Unless the policy of granting subventions is to be adopted on a scale not hitherto contemplated, it is difficult to see how speed across the ocean is to be increased without further diminishing dividends, but, if the obstacles to commercial success can be got over, the requisite skill for the production of still faster vessels will not be wanting.

I observe that one of our younger and more enthusiastic naval architects has recently contributed a paper to the Maritime Congress, entitled "Shipowners and Shipbuilders in their Technical Relationships," wherein he recommends the former to avail themselves to the full of the technical skill of the latter with the view of avoiding the creation of types of vessel unsuitable for given purposes, and provided that it is always possible to find a naval architect who has been chastened into stern resistance of temptation to build steamers with the showy attributes of great size or great speed when the interests of his employer would be better served otherwise, I agree that more intimate relations between these contracting parties might in many cases be advantageous to both.

I congratulate those shipowners and shipbuilders who may have found their affinities, and hope that they may long see their interest in maintaining the union inviolate. Let us hope also that the unfavourable commercial results of the working of so many magnificent steamers is not in any measure due to improper advice or erroneous information obtained from a trusted naval architect.

No doubt the profits of the higher class steamer carrying passengers and cargo are greatly affected by the extraordinary increase in size and numbers of those carrying cargo only, a type of steam vessel of which the evolution was foretold by the prophet Lardner in his writings. The survival of the cheapest is the modern application of the Darwinian theory to shipping, and the small capital account of the low speed cargo steamer gives her, for a time, a powerful lever against the vessel built with less regard to cost than to thorough excellence of design and workmanship, speed at sea, elegance of finish, and completeness of equipment. Year by year the differen-

tiation of cargo ship from passenger ship has grown more marked, till in the American whaleback some see the *reductio ad absurdum*. In that type we find merely a receptacle for cargo fitted with limited means of locomotion in favourable circumstances, and the qualities of what we have learned to recognise as a ship almost entirely dispensed with.

There is evidence, however, that ingenuity has gone rather far in this direction, and that ship-shape form, seaworthiness, and habitability, cannot be altogether abandoned, even in vessels whose employment is the humble one of the weight-carrier.

The increase of boiler pressures, made possible by the extended use of steel and improvement of boiler-making plant, has greatly widened the range of the cargo steamer, and enabled her to press ever more closely on the routes from time immemorial in the occupation of the sailing ship. From the compound to the triple engine was almost as complete a revolution as from the simple to the compound, and the share taken in the development of those improvements by Members of this Institution who are now no longer with us, must be to us a source of pride and satisfaction.

Their inventive genius and spirit of enterprise have changed the face of the world in many ways, and for their talents and industry we hold them in remembrance. Something, however, is due to their environment. The seed may be good, but fertile soil and favourable climate are necessary for a plentiful harvest, and it may not be unprofitable to put on record here the case of an inventor less fortunately placed for the appreciation of his genius.

A short excursion into the by-ways of engineering literature will discover a patent specification, granted in the year 1834, to Ernest Wolff, agent of G. M. Roentgen, of Fijnoord, Rotterdam, for improvements in steam engines.

It will probably be news to many that Mr Roentgen's inventions include the compound, triple, and quadruple engines, with separate cranks, also with two or more crank shafts connected by gearing or other mechanical contrivances, or with separate crank shafts so that the engines may be applied to distinct purposes. This arrangement

has, not so long ago, been repatented in connection with double and triple screws. The specification also describes the receiver, or steam chamber, commonly used in the present day, and an arrangement for heating the steam contained in it. Also, the by-pass for starting or temporary augmentation of power, and the compound locomotive.

I question if there are many patent specifications richer in original matter, and I think it is reasonable to believe that if in those days there had existed in Holland such an institution as ours, the inventions here described would have had a good chance of immediate and general adoption, the development of marine engineering would have been greatly stimulated, and the hapless inventor might not have ended his day in a lunatic asylum.

As things were, however, his inventions made no noise in the world until they came to be re-invented in more favourable circumstances by engineers who, in all likelihood, never heard his name.

If we turn now to a subject of perennial interest and importance to shipbuilders, the record of disasters at sea, our attention is at once attracted by the terrible catastrophe of the "Victoria." There is nothing more startling in naval annals than this sudden destruction of a costly battle-ship and the sacrifice of so much valuable life by a slight lapse of judgment in manœuvring, on which it is impossible to dwell harshly.

If peaceful evolutions may prove so deadly, what may we not look for during a naval engagement, when each side will use all the arts of warfare to send the other to the bottom; and if our first line of defence be so vulnerable that its effacement may conceivably be an affair of a few minutes, what do we depend on for our second?

We have here no previous experience to guide us. The warship of Nelson's time did not differ so fundamentally from an East Indiaman as a modern ironclad or cruiser differs from an Atlantic liner, or a cargo tramp; and the rapid improvisation of a fleet for the defence of our shores, or the attack of a still distant enemy, has been rendered impracticable by our progress in naval construction.

This sounds anomalous, but just as the increasing artificiality of modern civilised life makes us acquainted with new diseases, so the

development of highly specialised types of warship makes the breaches in our naval *cordon* more difficult to heal.

I am aware that, in our schemes of defence, judiciously disposed coal-bags are relied on for the ready conversion of a swift mail steamer into an armed cruiser, and such adaptations may, in the later stages of a naval war, be the best, or even the only vessels left floating; but I am inclined to think that their swiftness will be the quality to rely on for their survival. It must be admitted that up to the present, the capacity of warships to administer hard knocks is out of proportion to their ability to sustain them, and, in a floating structure, I fear it will continue to be impossible to keep defensive power on equal terms with offensive.

The maritime losses, other than those of the navy, show, for 1892, a total of 1008 vessels of 625,224 tons, wrecked or broken up, making a death-rate of 3½ per cent. according to numbers, or 2·8 per cent. according to tonnage. Of these, 215 were steamers of 257,048 tons, and 793 sailing vessels of 368,176 tons.

The percentage of steamers lost is therefore 1·8 according to numbers, and 1·9 according to tonnage; of sailing vessels, 4½ per cent. in numbers, and 4·3 per cent. in tonnage.

The average tonnage of steamers lost is about 1200, and of sailing vessels about 460, the latter figure being brought down by the large numbers of American, Norwegian, and Swedish small sailing craft reported lost. These are probably all coasters, which are, of course, peculiarly liable to loss by stranding.

The loss of vessels by burning, collision, or stranding, is hardly a naval architect's question; but it is otherwise with the case of vessels abandoned at sea, or which founder, or are reported missing. Of the latter, the great majority are small wooden vessels of a class no longer produced in this country, and which are, no doubt, destined to completely disappear; but of iron and steel steamers and sailing vessels there come within the category of last year's losses, without being satisfactorily accounted for, 48 in all—24 steamers and 24 sailers, 10 of the latter being, I regret to say, Clyde-built. In one, at least, of the steamers, structural weakness

appeared to be clearly established as the cause of her abandonment and loss; and in one of the sailing ships deficient stability, of which the proximate cause was no doubt defective stowage, but it is held by some that the form of many modern sailing ships is influenced for evil by the curious basis of valuation frequently adopted, as the only one that can readily be brought within the comprehension of the buyer—I mean the estimation of the value of a ship in terms of the dead weight she can carry at her load draught.

It cannot make for excellence in naval design that a strong inducement is offered to lighten the structure and increase the fulness of the form for the purpose of producing a large multiplier as one of the factors in the price, simultaneously with a reduction in the cost of building. The vigilance of the Registry Societies is barely sufficient to cope with the ingenuity of builders stimulated by the fierce struggle for existence of our days, and the ideal state of things is not the defiance by the Registries of any elusion of their codes of rules, but rather the co-operation of owner, builder, and surveyor, for a common end.

Further, it has to be borne in mind (I do not speak now to naval architects) that the work of a ship is, not the storage, but the *transport* of merchandise or passengers, and that her capacity to effect this in the most advantageous manner, and not the mere sustaining of weight in a dock basin, is the measure of her value. In dealing with this subject I am glad to notice that an undoubted authority on cargo steamers—Mr Robert Thomson, of Sunderland—in his Presidential Address to the North-East Coast Institution last year, gives it as his opinion that the increase in fulness to a co-efficient of 0·82 is not accompanied by any gain in the efficiency of the type, although the shipowner apparently has a cheaper ship, calculating on the fallacious basis of total cost divided by weight of cargo. It is obviously quite possible to go to extremes in fulness as well as in fineness, and there appears to be evidence that, in some recent vessels, owners have passed the degree at which the best compromise is to be found; and the possible diminution of profits may bring about a working back to a more ship-shape form.

While the industry of shipbuilding for commercial purposes has been languishing of late, there has been more than usual activity in the construction of vessels for the pleasure navy. Some notable additions have been made to the fleet of steam yachts of large tonnage, of which the largest has been built in England for a member of the American plutocracy.

As channels for the distribution of wealth, large steam yachts are effectual, and being free from the objections which attach to some forms of sport, it is fortunate that their use is greatly extending; but it is remarkable that during the negotiations between yacht owners and builders, the stream of lavish expenditure frequently receives a temporary but severe check.

The present year will be memorable for the renewed interest in match-sailing with first-class yachts, and for the most creditable effort yet made for the recovery of the America Cup. It is to be regretted that the coveted prize did not reward the splendid display in American waters of Irish enterprise, English seamanship, and Scottish skill in yacht building. These have been defeated by the corresponding qualities in the American citizen, aided by the astuteness in bargaining which is his traditional characteristic.

Not one of the contests for the famous cup can be looked upon as a return match, similar in conditions to the original sporting event at Cowes in 1851, when the cup was won by the schooner "America." At that date the yacht for racing purposes exclusively could hardly be said to exist in this country, and the appearance of the "America," built expressly for speed alone, among the British fleet of pleasure boats, was not preceded by six months' notice. No special preparation was therefore made for her reception.

The conditions now imposed on the challenger from this side make a perfectly fair contest impossible.

I do not lay much stress on the fact that the British champion must be a wholesome boat, fit to cross the Atlantic, and will concede that the "Vigilant" is as fit to make a Transatlantic voyage as the "Valkyrie." But the leading dimensions of the challenging vessel must be disclosed, and the defender may build as many vessels as

he is disposed to find dollars for, each of these may be more powerful than the vessel it is to meet, and all the compensation for the difference in capacity for speed is a time-allowance based on no known law of hydro-dynamics, and about which only this is certain, that it may be wrong in every condition of weather in which racing could take place, and must be wrong in all but one at the most.

The odds are thus so fearfully against the challenger that it would require superhuman gifts in our builders to overcome them, and in future contests it should be exacted as an essential condition that the challenger should know as much of the defender's designs as the defender has to know of the challenger's design, and that no advantage in capacity for speed, so far as that quality is conferred by dimensions, should be permitted to either side.

I have, in an earlier part of this address, alluded to the despondency with which social subjects are often approached, as contrasted with the opposite tone usually adopted when dealing with mechanical or scientific topics. In the mechanical arts the loss of a position once gained can but be due to indolence or carelessness. Imitation of the best models is easy, and even the origination of minor improvements is not difficult; whereas, in matters connected with our social relations, the maintenance of a high standard of conduct involves continuous and strenuous personal effort, occasionally no little sacrifice—indeed, no society can long exist without a certain surrender by the individual of his own perfect freedom in the interest of the general body. Social decadence, therefore, might possibly exist without retrogression in physical science, and might even co-exist with advancement in mechanical invention, and man's power in directing the forces of nature increase while his sympathy with his fellows diminished. Such an Institution as ours cannot patiently contemplate deterioration of any kind, and, while the study of mechanical problems is its chief object, that great social question, the relations of employer and workmen, may fitly engage the attention of its members, so far at least as these affect the industries in which we are interested, and which are carried on by

the co-operation of large bodies of men, guided by the higher intelligence which is, or ought to be, found among those who fill the positions of masters, managers, designers, or superintendents. If I venture to touch briefly on the Labour Question, it is with the hope that some spark may be emitted which will kindle a desire to apply scientific method to difficulties which, more than most, stand in need of searching examination.

It is very commonly maintained that at no previous time in the history of mankind were the toiling millions so discontented, the relations between master and man so strained, or the outlook for industrial undertakings so gloomy, as now.

The good old days when workmen were diligent, patient, and grateful; when employers were treated with that deference which is their due; when the paid delegate had not been invented, and the strike, the lock-out, and the picket were unknown; when, as yet, the English love of fairplay had not been shown by mobs of colliers setting on their fellows at a hundred to one and pounding them to jelly for daring to earn a living in their own way; those peaceful and prosperous times are referred to with regret and foreboding of the unlikelihood of their speedy return. But, even after painstaking historical research, it is impossible to fix upon the date of the primitive golden age of the industrial world, or a time when regrets for days gone by were not frequent and profound.

It must, at all events, have been anterior to the colossal strike of brickmakers in Egypt and the consequent exodus of the oppressed —a labour movement to which no disturbance in our day is any more comparable than the ranting, boisterous organiser of the New Unionism is to the majestic figure of Moses.

Some three hundred years after this revolt (if I may still cite as historical the Hebrew records before a scientific body) we find life on the estate of a man of wealth portrayed in a charming aspect in the story of Boaz among his reapers invoking blessings upon them, and the labourers making cordial response in like manner.

With the manners and customs of our contemporaries in the rural districts of this country I am not sufficiently acquainted to be able

to say what sort of language is commonly to be heard in the harvest field, but I will venture to affirm that such a salutation from the owner of a modern factory to his hands would be received with considerable astonishment, and I doubt if any of those so addressed would have the presence of mind to make an appropriate reply.

Even in Palestine, however, these admirable relations between capital and labour were neither general nor constant. Only three generations later, in the time of the great-grandson of the gentleman farmer to whom I have referred, we find quite other conditions, for it is recorded of a great stock-raiser in Carmel, that his reply to a civil message was: "There be many servants, now-a-days, that break away every man from his master." There is quite a nineteenth century ring about Nabal's complaint, and it is comforting to know that human nature has changed but little in three thousand years. The reply of the working man of the period, concerning his master: "He is such a son of Belial that a man cannot speak to him," showed that the golden age was certainly past, and antagonism between employer and employed had fairly set in.

The capitalist of apostolic times is not well spoken of, and we are forced to conclude that, in times past, whenever cash payment had to be made for services rendered, selfish employers and unprofitable labourers were not altogether unknown. The performers, the language, the scenery, and the stage may be changed, but the drama is always the same.

In Europe, serfdom began to disappear, and the wage system to take its place, early in the thirteenth century, and with its establishment arose those disputes which appear almost inseparable from it. Landowners, farmers, and other employers of labour became so alarmed at the continual increase of wages, that, in 1350, the Statute of Labourers was enacted, and this first attempt of the legislature to regulate wages remained the law of the land for more than 200 years.

Under it, the wages of the year 1347 were declared to be the standard, breach of contract by the workman was punishable by

imprisonment, and the giving of alms to the able-bodied was forbidden. But the combined efforts of King, Lords, and Commons, were quite ineffectual to prevent the rapid rise of wages which the gradual improvement in the manner of living of the labouring classes rendered necessary, and the scarcity of hands in consequence of the Black Death of 1349 made it possible to secure.

In 1388, a statute was enacted, forbidding any labourer to remove from one part of the country to another without a letter patent under the king's seal, and this enactment was somewhat more effectual in checking the material progress of the labouring classes for a time.

In 1563, in the time of Elizabeth, an act was passed giving authority to the magistrates to fix the rate of wages every six months. It is noteworthy that there exists at present in Glasgow an association of employers, which declares one of its objects to be the reviewing of the rates of wages twice a year in accordance with the times, in the manner prescribed 330 years ago by Queen Bess's most excellent majesty, but, in the local case, without the intervention of the civil authorities.

The resultant of all the efforts of labourers to raise wages, and the determination of rulers to keep them down, was the maintenance of real wages at an almost constant level, although nominal wages were continually rising. Wages followed prices with tolerable constancy until the entirely new condition of things arose which is the effect of the steam-engine, the spinning-jenny, the power-loom, the locomotive, the steamship, the cheap literature, and the host of inventions which the genius of Watt has rendered possible.

New wants have been created by the creation of the means of supplying them. New habits have been formed by the possibility of indulging in them, and the effect upon the wages of the manufacturing classes is to force them to the rate which is sufficient to ensure the satisfaction of the new wants and desires. The tendency of wages to adjust themselves to the standard of living appears to be irresistible; it is difficult at all events to explain the alterations on wages on any other theory.

We cannot, in the time at our disposal, follow the history of wage disputes in all ages. We have seen that relations between the payers and earners of wages were often strained in ancient and medieval times. Coming nearer our own time and place, the great strikes of 1837 among cotton-spinners, colliers, and iron-moulders were estimated by the late Sheriff Alison to have occasioned a loss in Lanarkshire alone of half-a-million sterling, and, in a speech of his at the trial of a spinner for intimidation, he expressed an opinion that society could not sustain a repetition of such shocks, but that capital must migrate from the country where such calamities were possible. The migration of capital is still foretold from time to time, but its flight is still delayed.

Of recent disturbances of industry it is needless to speak. Enough to have shown that disputes on wages questions have always been and probably will be so long as the sole *nexus* between man and man is cash payment, and I suggest as a subject not beneath the notice of Members of this Institution a scientific method of dealing with wages, if such can be devised. The old methods have been tried with results the reverse of satisfactory, and some men, reputed wise, say that the doctrine of *laissez-faire* has had its day. The law of supply and demand has been wittily described as one by the operation of which you begin by demanding a shilling for a pennyworth of what is urgently wanted, and end by offering for a penny a shilling's worth of what is not wanted at all. This law may theoretically be sufficient for the adjustment of the conflicting claims of master and man, but it will hardly be contended that it would be convenient in practice to have wages subject to fluctuations like those with which the Stock Exchange makes us familiar. Neither can we calmly await the adaptation of the supply of workmen to the demand by the starvation of the redundant numbers. Some artificial regulation is, I believe, necessary, and it might be our part to show, if we can, how that regulation can be intelligently applied, and how waste of energy in striving for the unattainable should be avoided.

Many of us have no doubt been amused by a highly imaginative

work, entitled "Looking Backward," wherein the author depicts an ideal Socialism providing for all wants on the sufficient and yet economical scale by which the manna in the wilderness was regulated, each having full supply and nothing over.

The weak point in that conception is, of course, that in no state of society of which we have any knowledge has there ever been enough of wealth to divide out in such ample shares.

Our own country is still the wealthiest in Europe, and the total gains of the nation from Agriculture, Mining, Manufactures, Transport, Rent, Commerce, Shipping, Banking, and the learned Professions, were estimated at £1,300,000,000 sterling, for the year 1889. Our population at the same time amounted to 38,200,000; so that, if the income were equally divided, there would just be 13s per week for each man, woman, and child in Great Britain and Ireland. Assuming that each person had equal rights to the products of industry, it might be said that 13s per week expressed the just measure of his or her rights in current coin, and that any aspiration for more could only be gratified by being unfair to the community.

Leaving out of consideration a monarchy, which could hardly be maintained in dignity and splendour on 13s per week each to the sovereign and consort, with a similar allowance for each prince and princess—it is probable that a commonwealth, though composed of persons strongly imbued with the civic spirit, might require a government of some sort; but even a Nationalist Member of Parliament would barely be content with so scanty an *honorarium;* and an efficient minister, prime or otherwise, could hardly be obtained at the price. Our generals, admirals, naval constructors, judges, doctors, and other necessary capable and learned men could not well be developed under such conditions; and as for our captains of industry, men of enterprise, skill, and invention, does any one suppose that their faculties would mature, and their efforts be stimulated, without the prospect or hope of gain commensurate with their labours, risks, and talents?

Deprived of those who take the initiative in operations of pro-

ductive industry, who can doubt that the gains of the nation would fall below that of the lowest in the scale of civilisation?

In Russia, for example, the income per inhabitant is only one-third of that enjoyed in the United Kingdom, not because her soil is unproductive, her mineral resources inconsiderable, or her population indolent, but because internal communication is undeveloped, and men of light and leading are extremely rare.

It is evident, therefore, that the object of every one who desires the welfare of the wage-earner ought to be the increase of the gross earnings of the nation, rather than the decrease of the share now falling to any individual or class. It has been well said that the prosperity of each one of us is inextricably bound up in the prosperity of every one else, and the manner of increasing our own gains is not to lessen the gains of our neighbour, or to put obstacles in the way of his enrichment, but rather to contribute to his success in the full assurance that a portion must overflow towards the reservoirs of others.

A rich minority has always existed in civilised communities, and no revolution has ever yet been able to obliterate it, neither can it be made to permanently disappear in a free country, liberty being, in the nature of things, for ever inconsistent with equality and fraternity. All attempts, on a large scale, to enrich the poor at the expense of the wealthy must fail, for the simple reason that the rich are not rich enough to supply the means, and the modern idea of bettering the producer by diminishing production, is of all notions the most foolish.

The patriarchal system is not compatible with the factory system and the Employers' Liability Acts, which substitute costly legal process for the impulse of benevolence. Methods of ensuring equitable industrial remuneration must, I conceive, be devised after careful investigation of those subtle laws, whereof we may discern the operation, but which, as yet, have not been codified in a manner to be "easily understanded of the people."

Such an investigation I commend to some of the active brains among our membership, and would, for encouragement, point to the

apparently satisfactory settlement of the apprentice question, long a root of bitterness in the iron shipbuilding yards, not by strike or lock-out, but by calm discussion founded on ascertained facts and laws deduced therefrom. Other labour questions I believe to be capable of solution in like manner, and I am confident that sooner or later the solutions will be found. They will, however, I believe, continue to elude those who seek for them in the nationalisation of mines, railways, and factories, or in any system which does not leave the individual free to secure the full reward of his own exertions.

As for the future of engineering, civil or mechanical, and of shipbuilding for war or commerce, I venture on no prophecy, having the permanence of our records and the fear of posterity before my eyes.

In shipbuilding, however, it is safe to say that the prodigious development of it must in time be checked. Increase of population and the extension of empire cannot go on indefinitely.

The waste places of the earth must ultimately be filled up, and emigration cease. The volume of trade must attain a maximum when the limit of productivity is reached.

But renewals, and the repair of loss and decay, give employment to many now, and must even in the stationary stage continue to do so, and, for long after civilised humanity has spread over the earth's surface, our engineers will have ample occupation in subduing the forces of nature which are hostile, and harnessing those which are serviceable to man; in abolishing pestilential swamps, and transforming tropical jungles into pleasant places of habitation; in irrigation of parched deserts, and in perfecting sanitary appliances, until the appearance of an epidemic shall be regarded as disgraceful, and disease germs shall only be found in museums of morbid anatomy.

The mechanical engineer has yet scope for devising means of relieving mankind from labours which are irksome or brutalising, and ensuring that all toil shall be healthful and pleasant; and the ship that shall satisfy the poet by "laughing at all disaster," belongs, as yet, to the distant future.

In that future, our feats of invention and construction may be forgotten, but although posterity may not recognise them, the efforts of this centre of intellectual energy cannot fail of their due influence; and our works will, I trust, be such that, if they follow us at all, they may follow us to our honour, when we have rested from our labours, and the torch of knowledge has passed from our hands to those who will carry it to regions we shall never reach.

Mr ROBERT DUNDAS, Past President, said when the President started he seemed to be in some doubt as to the subjects being exhausted that could be dealt with in an Inaugural Address, but as he went on they had observed that the subjects were by no means exhausted, and that for him, at any rate, there had been an ample mine from which to draw his remarks, and clothe them with his own individuality, and he was sure that in that room they had seldom, indeed, never listened to a more brilliant or able Presidental Address. He moved that they accord to the President a very hearty vote of thanks for his address.

The motion was carried by acclamation.

The PRESIDENT thanked Mr Dundas very much for proposing a vote of thanks, and thanked the members for their hearty response, and also for the exemplary patience with which they had listened to him.

On "A Percussive Tool for Caulking Chipping, Mining, etc."

By Mr J. MacEwan Ross.

Received and Read 24th October, 1893.

THE operation of caulking boilers, ships, tanks, etc., has long been performed by hand labour, but in recent years the demand for heavier work, turned out with greater rapidity, has attracted the attention of engineers, to endeavour to supersede hand caulking by mechanical work. Within the past few years mechanical caulking has been introduced with considerable success, but in the matter of simplicity of tool there was much room for improvement.

The tool now described and exhibited is composed of few parts, and those are of the most substantial character.

When the tool is to be worked by compressed air, the outer casing is of cast-iron with the handle cast on. The casing, A (see Fig. 1), is truly bored and fitted with a phosphor bronze liner, B, forming the cylinder, in which the piston works. On the outside of the bronze liner are cast rings, leaving annular spaces between them and the outer casing. These spaces are divided into inlet and exhaust *passages* for the working fluid by suitable projections cast on the outside of liner and accurately turned to fit the casing.

Communication between these passages and the interior of the liner is effected by several admission ports, C, and exhaust ports, D, formed in the liner, and so placed that the piston, in its reciprocating movement, operates as a self-acting valve, automatically admitting and allowing the escape of the working fluid.

The piston, E, is a solid steel forging, truly turned and ground into the cylinder, so as to work quite free. It is about 3 inches

Fig. 1.

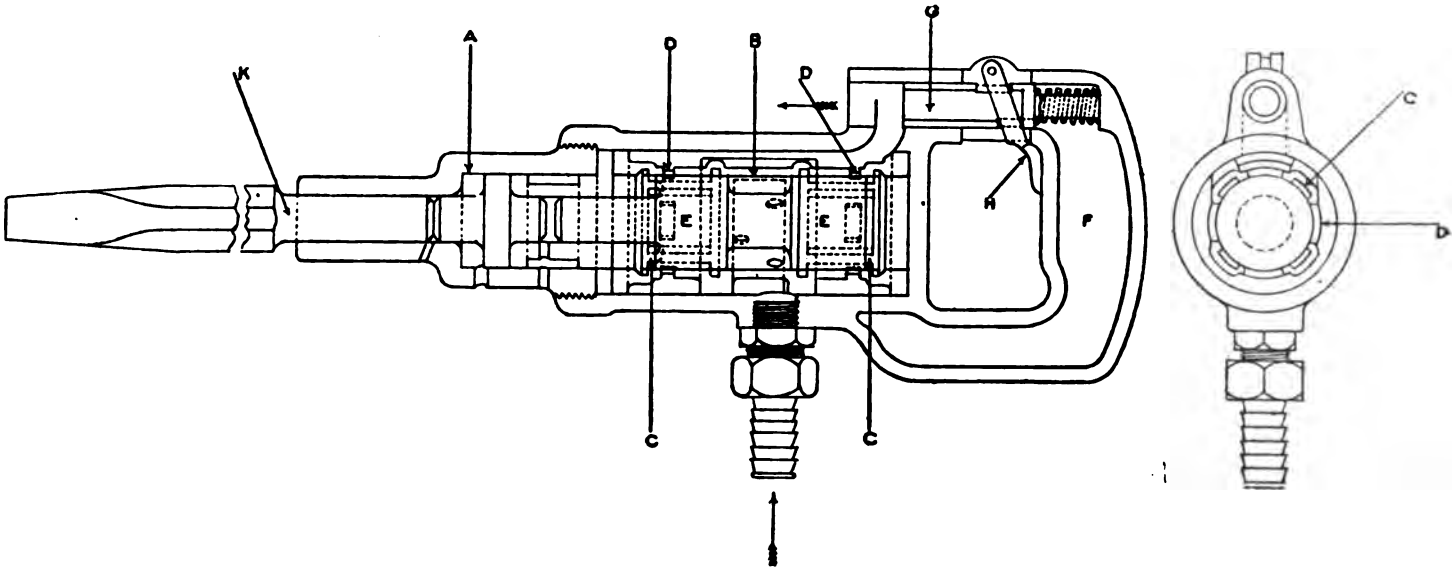

long, 1½ inches in diameter at the ends, and slightly reduced at the centre, where the actuating fluid is introduced into the cylinder. The weight of the piston is 1½ lbs., and it is the only working part in the tool.

The handle, F, of the outer casing is cast hollow. One side is truly bored out and fitted with a brass piston valve, G, covering the outlet of exhaust. This valve is fitted with a trigger, H, which, when drawn back by the finger, sets the tool in motion by allowing the exhaust to escape.

The principle upon which the tool works is simple. The piston is turned, as before stated, reduced at the centre, leaving a collar on each end. The inside edges of these collars form the cut-off edges for pressure, while the outside edges govern the exhaust ports. When the piston is in its central position in the cylinder there is a dead point—the actuating fluid only finding admission to the reduced space in the centre of piston—but when the piston is allowed to rest on the end of the chisel, K, and the tool is pressed up to its work, the inlet and exhaust ports are opened and the tool is filled with the actuating fluid.

If, now, the trigger valve be opened, the pressure on upper or back end of piston is removed, and the tool is at once in rapid motion, The piston, being a very accurate but easy fit in the cylinder, is carried over the dead point until it is cushioned at the back end of the cylinder, and similarly on its return stroke, until it strikes the chisel head at the other end.

The short description just given will be better understood by an examination of the tool, which is shown in section.

It has, as stated, a piston 1½ inches in diameter, and the total weight of the tool is about 12½ lbs.

This size of tool has been found most suitable for general engineering work. It is capable of caulking at the rate of about 3 feet per minute, and work done by it on the Clyde has been satisfactorily tested up to a pressure of 400 lbs. per square inch. With one of these tools a man can perform as much work in a given time as six or eight men can do by hand, and the work will be of a

more efficient character than can be accomplished by the old methods.

This tool is well adapted for *general* work. Where, however, the work is of a lighter character, such as ships and tanks, we find that a tool with a piston $1\frac{1}{4}$ inches in diameter is most suitable, as shown on the table. For low pressure or exceptionally heavy work we make a tool with a piston $1\frac{3}{4}$ inches in diameter.

A few parings are shown from plates, chipped off by the tool, and these will give some idea of the work it can do. It will be seen that the tool is simple in design, and not liable to derangement, there being no delicate mechanism about it.

The tool which has just been described is, of course, only applicable where compressed air of from 40 to 60 lbs. per square inch is available. There are many works where the want of compressing machinery is a hindrance to the introduction of mechanical caulking, and the design of the pneumatic tool has been accordingly modified to render it suitable for steam as well as air. (See Fig. 2.)

One of the steam tools is shown. On the casing are cast two snugs for receiving a separate handle.

This handle is composed of a central core of wrought-iron, *screwed* on the two ends, for fixing to the casing. Round this core is cast a non-conducting covering of hard rubber or vulcanite.

The nozzle of the tool is similarly protected, and an additional tube is fitted for conveying away the exhaust steam.

The arrangement of non-conducting material described gives full protection to the workman from the heat, and no inconvenience is experienced. This steam tool works equally well with compressed air, the pressure required being from 40 to 60 lbs. per square inch for ordinary work.

Those tools are now largely used for caulking, and they have been applied with success to the operations of chipping plates and dressing castings, etc.

In conclusion, it may be mentioned that within the last month or two, a new and wide field seems to be opening for this tool. From

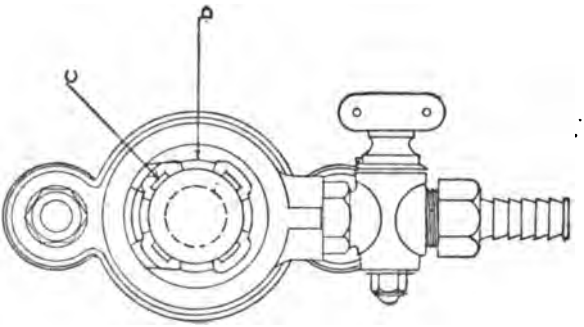

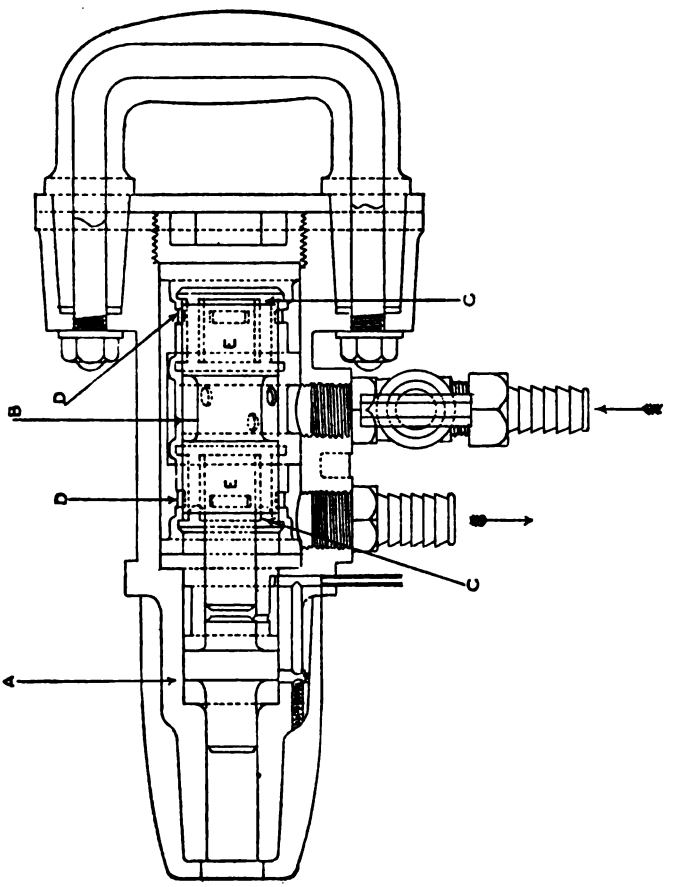

Fig. 2.

experiments made with it as a *rock borer*, it appears to be admirably adapted for that purpose. With the drill now shown on the table, it has bored a one-inch hole through sandstone at the rate of about 12 inches per minute, and through whinstone at the rate of from 4 to 5 inches per minute.

Many experts, familiar with rock boring in South Africa and California, have expressed their great satisfaction with the performance of the tool upon stone.

Mr JOHN BARR said that about two months ago his firm had got one of these tools, but the difficulty was to get the men to work it. They found that it was very sore on the arms. The vibration went up the arm like an electric shock, and the men could not work it longer than a quarter of an hour. When he saw there was to be a paper upon this subject, he had a few experiments made with the tool working on a plate of cast-iron seven-eighths of an inch wide. The man with the tool chipped one foot in length by one-eighth of an inch deep in five minutes. It took him four and one-sixth minutes to do it by hand. With wrought-iron of the same width by one-sixteenth deep, it took him seven minutes with the machine, and six and one-third minutes by hand. He was a little afraid at first that prejudice had something to do with the failure of the machine, but as the man had been working the tool for some time, and had got accustomed to it, he hardly thought the trial was prejudiced. He thought the machine was rather heavy for chipping. He had no doubt it might do well for caulking. It weighed 15½ lbs., the chisel 2 lbs., and then there was a hose connected with the steam boiler, part of which (6 lbs.) was carried by the man, so that he was handling a weight of 23½ lbs. in all. There was great vibration and noise. When the tool was going one could hardly hear anything when near it. At the same time it was an ingenious tool, and with a little modification he thought that the inventor might be able to produce one more applicable than the present one for chipping purposes.

Mr HENRY M. NAPIER thought that this was much the same machine he had tried three years ago on a steel vessel. It seemed to be very much the same, except that the handle was altered. He had much the same experience as the last speaker about the trouble of working it, but found that it did very good work. The trouble was to get a man to work it. If the tool were held hard up to its work by the left hand, then the right hand and arm vibrated very much; and, if held looser, the right hand was steadier, while the left vibrated most uncomfortably. In either case the vibrations were not appreciated by the men, and one man quite lost his appetite over it. The machine had been given a fair trial. Two yards of caulking had been done by a man sent specially down by the makers, in less time than a caulker did by hand on an adjoining plate. He had tried to reduce the vibrations of the hand by fitting a long spring handle, but even that did not improve matters much. If the machine could be suspended in air, and the tool held hard up to its work, less discomfort would be felt. He thought the machine most ingenious, but that the inventor had something more to do before workmen would take to it kindly.

Mr ALEXANDER E. STEPHEN said that they had two tools of that kind in their boiler-shops, which they had got about six months ago from Mr Ross, and he must say that they had given them great satisfaction. They had had no trouble whatever with the men working the tools. At first the men did get a little sore in the arms, but after a day or two they gave up complaining, and since then they had no trouble, and the tools had done excellent caulking. In fact, he preferred the caulking done by the tool to caulking by the hand. In testing boilers they had had less leaking the first time that the boiler was filled with water than if the caulking had been done by the hand. He had great pleasure in testifying to the excellence of Mr Ross's machine.

Mr BRIER asked Mr Ross if he could give the Institution any figures of the working of the machine with compressed air or steam relative to the amount of work done?

Mr MAVOR said that he had had no practical experience of this machine except what he had seen in Mr Ross's works, but it occurred to him that one reason why the machine vibrated so much was that the men held it too tight, and that if they allowed the tool to hang in the hand, and let inertia come to their assistance, they would find that it was not such a severe strain. The shock was not more than a slight galvanic shock, and he thought the men would soon get accustomed to it. He had found no difficulty in chipping a piece of iron himself with it the first time, and it was a very surprising result to hold the tool and be able to chip a plate in the way described by Mr Ross. There was no doubt whatever that the sensation was a disagreeable one, but he thought that that was due to the men holding the tool tighter than there was any need for.

Mr STROMEYER said that the setting up of the metal at the edge of a plate by caulking could only be effected by pressure, and as regards the ultimate result, it did not matter whether this pressure was produced slowly (for instance, by hydraulic means), suddenly (by the blow of a hammer), or by innumerable light blows of a pneumatic caulker. The idea of suspending it in air would therefore not do at all; after the first one of the vibrating blows the tool would move away from the seam and not return again. The pressure required for keeping it in position was about equal to the force expended by the workman while propelling the hammer towards the caulking tool. The force required for holding the pneumatic caulker in position was practically a continuous one, and as it was acting against a man's arm in a manner described as resembling that of an electric induction current, it was hardly to be wondered at that the sensation was a disagreeable one.

Mr MAVOR said that if they took a hammer by the head they would feel very much the same thing. The tool had to be held with a certain force, but not so tight as some men held it.

Mr SINCLAIR COUPER said he had felt some truth in what Mr Mavor said, that the men were apt to hold the machine too tightly.

It was a mistake even in chipping with the ordinary hammer and chisel to grip the hammer too tightly. Men were inclined to lay hold of the handle, and the fore part of this machine also, with the greatest rigour, but it should rather be held as lightly as possible. When there was less holding-pressure, it was his experience that there was less shock on the elbow.

The discussion was then adjourned to next General Meeting.

The discussion on this paper was resumed on 21st November, 1893.

Professor JAMIESON sends the following notes of his experience. He says—when the tool was handled by an experienced workman it seemed to act more accurately and quickly than a skilled workman with the ordinary engineer's hammer and chisel or caulking tool. When fitted with a diamond pointed chisel the tool ripped a straight line cut along the face of a very tough piece of wrought-iron (viz., the head of an old steam hammer piston rod) 6 inches long by about $\frac{3}{16}$ inch deep, in 15 seconds. With a flat chisel it chipped from the face of the same tough piece of iron a strip 6 inches long by $\frac{1}{2}$ inch broad by $\frac{1}{8}$ inch thick in 20 seconds, whereas it took himself nearly 30 seconds to do the same with an ordinary hammer and chisel, and he could not have kept up this speed for over quarter of an hour. When applied to boring holes through stone it made a round hole of 1 inch diameter and 9 inches long in a block of sandstone, in a minute and a half, with far greater certainty and ease than could be done by a jumper-iron and a hammer. It therefore appears to have a very useful application to driving holes for the introduction of powder or dynamite in the case of blasting rock or other such mining operations. When applied to caulking it raised a clean, deep, firm burr in the iron, which could only have been equalled in time and precision by a first-class workman doing his utmost. When working with Mr Ross's apparatus for the first time, the sensation of such rapid vibrations are certainly peculiar,

and might become painful after a time, but he had no doubt that a willing ordinary labourer (if shown how to handle the instrument properly, and if given a pecuniary advancement in his wages) would soon be able to beat a skilled mechanic using the ordinary shop tools for chipping and caulking iron, or chipping and boring stone. He believed that it could be advantageously employed in dressing Aberdeen granite monumental work, an industry which now employs many thousands of workmen. It may be interesting to the members of this Institution to know that Mr Nikola Tesla, the well-known electrical engineer, in his address to the International Congress of Electrical Engineers, at Chicago, on Friday, August 25th last, upon "Mechanical and Electrical Oscillations," used mechanism constructed on the same principle and actuated by the same means as Mr Ross does, for obtaining oscillations of a perfectly constant period, which he proved to be *independent of the pressure of air* or steam, within very wide limits, and also independent of the frictional losses and load. With this reciprocating motion he produced electric currents of a perfectly constant period. With his apparatus, experiments and investigations on alternate currents can be carried out with great precision; for, along with his reciprocating pistons there is associated air chambers at each end of the piston's stroke, which act as air springs or dash pots, so that the system behaves exactly like a string tightly stretched between two points and with fixed nodes.* Mr Tesla, in his lecture, drove his apparatus (he said) at 160 strokes per second, or 10,800 strokes per minute. Mr Ross said that he had arrived at 8000 strokes per minute, but neither of them informed their audience how they had counted such rapid vibrations. It appeared to him that one of the simplest ways of arriving at a correct result would be to cover a flat pulley with white paper, place the pulley in a screw-cutting lathe, and fix the tool in the slide rest (see annexed figure) so that the point of the tool just impresses the paper with slight marks as it travels along

* For a more complete account of Mr Tesla's apparatus and experiments refer to *The Electrical Engineer* of New York, of August 30th, 1893.

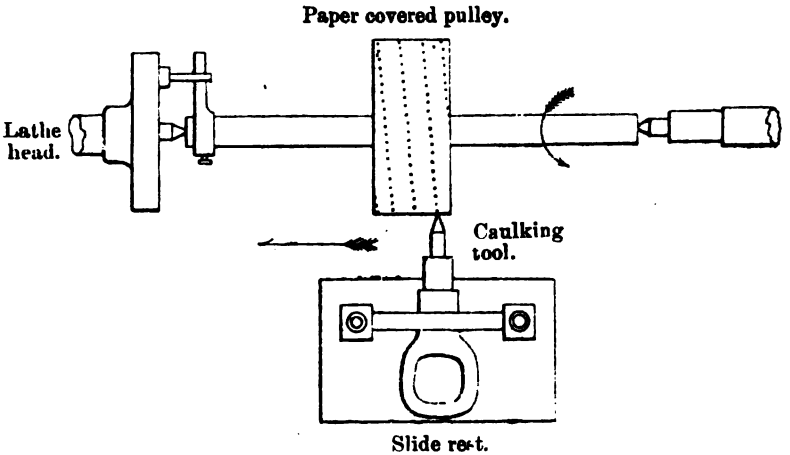

Method proposed by Professor Jamieson for Ascertaining the Number of Strokes per Minute made by Mr Ross' Caulking Tool.

the bed of the lathe and as the pulley revolves, thus making a screw line of dots on the face of the paper. The number of the dots or marks made on the paper could then be counted within a certain known time by aid of a stop watch. He was convinced that Mr Tesla found an immense advantage by using much larger ports than Mr Ross had employed. Although differences of opinion are sure to be expressed in regard to the capabilities of Mr Ross's apparatus, they were all much indebted to him for laying before them in such a clear manner (by aid of the excellent models and drawings) his most ingenious labour saving instrument.

Mr Ross said that Mr Barr had stated that he had chipped cast-iron at the rate of 12 inches by $\frac{7}{8}$ths by $\frac{1}{8}$th with the tool in question in 5 minutes, but he (Mr Ross) had made the experiment that day, and had done it in 2 minutes. Mr Barr had chipped wrought-iron 12 inches by $\frac{7}{8}$ths by $\frac{1}{16}$th deep, and it had taken him 7 minutes, but he (Mr Ross) had done it in 10 seconds under 2 minutes. Mr Ross had chipped wrought-iron $\frac{7}{8}$ths by $\frac{1}{16}$th inch at 20

seconds a foot by using a narrow chisel. The long time Mr Barr had taken to do the chipping showed that the operator was unaccustomed to work the tool. Besides, the tool was designed for a caulking tool, but he found that it chipped very well, and that was the reason of its introduction as such. Mr Napier had said that he saw the same machine three years ago; his machine, however, was not introduced then, and had only been about six months in the market. Mr Brier had asked what the consumpt of air was. It was about 20 cubic feet per minute, and that would caulk plates up to an inch at the rate of 3 feet per minute. Mr Mavor and Mr Sinclair Couper were quite right in saying that grasping the tool too tightly increased vibration. Mr Stephen's testimony was of real value, as he had worked two tools continuously for over six months, and had found that he could get his men to work it. Professor Jamieson remarked that, when caulking, the tool "raised a clean, deep, firm burr in the iron, which could only have been equalled in time and precision by a first-class workman doing his utmost." Now, it had been clearly proved that the tool could do the work, when caulking, of half-a-dozen experienced men when working by hand. Professor Jamieson gave an illustration of a method by which the number of strokes per minute taken by the piston might be found, and the same idea had occurred to himself. He begged to thank the members for the interest they had taken in the discussion.

The PRESIDENT—Might I ask what pressure the air was at?

Mr ROSS—From 40 to 60 lbs. per square inch. The following was from a letter from the Great Northern Railway Company, signed P. Stirling:—"We are very well satisfied with the pneumatic caulking tool that we had from you, and you may send us another.' Another from Thomas Richardson, Hartlepool Engine Works, states:—"From experience, we find that the smaller tool is very satisfactory indeed, and the trouble we had at first was simply owing to the men being unaccustomed to work with it."

The PRESIDENT asked the members to accord a vote of thanks to Mr Ross for his paper. He seemed to have made a good case for

his machine. The testimony of a witness who said that he could work it, was of more value than that of any number of witnesses who could not work it.

The vote of thanks was heartily accorded.

On "The Strength of Large Ships."

By Professor J. HARVARD BILES.

(SEE PLATES I., II., AND III.)

Received and Read 21st November, 1893.

IT is generally known that the stresses brought upon large ships are much greater than upon small ones, but I am not aware that the estimated relative stresses upon ships of more than 400 feet in length have been published. Probably some of the members of this Institution may be interested in the results of a series of calculations which have been recently undertaken with a view to studying this question.

Before giving these results it is desirable to state the basis upon which the calculations have been made.

Consider first the case of a vessel floating in still water. The distribution of buoyancy in a fore and aft direction can be determined by finding the area of the cross section of the vessel at every point of the length up to the water-line at which she is floating, and converting the area into volume by assuming it to be one foot thick. We can thereby obtain, at every point of the length, the buoyancy per foot of length. It is sufficient to find these values at suitable distances apart, and to set up and pass a curve through the points so found. This curve represents the supporting force at every point of the length of the vessel, and if each ordinate be divided by 35 (the number of cubic feet in a ton of salt water) we can obtain a curve of supporting forces in tons per foot of length.

The distribution of the weight can only be determined by laborious and detailed calculation, but no results can be obtained unless such work is done, or some approximation be made by assuming an arrangement of weights similar to some known distribution. If the weights so obtained be set out so as to represent at each point the weight in tons per foot of length, we can superimpose the curve of weight upon the curve of supporting force (or buoyancy), and obtain in a clear form the relative distribution of the upward and downward forces acting upon a ship floating in still water.

The parts of the curve common to both sets of forces may, for purposes of steady statical stress, be at once left out of account, because they balance each other. The unbalanced portions are called the loads, and it is this inequality which necessitates strength in a structure even when floating in still water. The ship may now be assumed to be out of the water, and may be considered in the same way that any other structure would be, the forces assumed to act upon it being the loads or unbalanced portions.

When we pass from the case of a ship in still water to one in disturbed water, we are at once face to face with the fact that the ship will probably be in motion, and we must take into account the forces necessary to move the various parts of a ship at the different relative velocities. The mass of the ship will remain unchanged, except in such a case as taking water over the bow and holding it on board a sufficient time to seriously affect the total mass to be moved. The supporting force will be continually varying as the vessel passes through the various combinations of crests and hollows which form the surface of the sea.

It is obvious that an infinite variety of cases may be taken upon which calculations may be made, but it serves the shipbuilder's purpose sufficiently well to find out the stresses in the worst probable combination of sea. For this purpose it is assumed that a ship is subjected to the most severe stresses when upon a wave of her own length, and that the height of the wave is a most important element in the amount of the stress. To determine the distribution of supporting force when the ship is in this position, it is assumed

that she is poised instantaneously upon the crest of such a wave. The usual assumption is that the height of the wave is one-twentieth of its length, and that it is trochoidal in form, the trochoid being generated by rolling on the under side of a line a circle whose circumference is the length of the wave, and by causing a point distant the half-height of the wave from the centre to trace out the required wave profile. In this condition the surface of the water has changed from a level to a trochoidal line, and if this were the only change it would be only necessary to find the cross sectional area up to the altered surface at each section in order to obtain a proper curve of supporting forces in wave water. The difference of the relative distribution of the upward and downward forces between this case and that in still water is, that there will be generally a greater excess of support amidships and of deficiency in the end. But the causes which make the surface assume the trochoidal form also make a modification of pressures underneath the surface such that the depth is not (as it is in still water) a direct measure of the pressure at any submerged point. It is possible from the trochoidal wave theory to determine the pressure at any point in a wave, and if we assume that the pressure is the same in a wave when the ship is in it as when the ship is not there, we can determine the supporting force, though not without considerable labour. Taking accurate account of the pressures of the particles in the wave was shown by Mr W. E. Smith, of the Admiralty, to have the effect of reducing the supporting force in the crest, and of increasing it in the hollow. Hence the stress due to excessive support in the centre of the ship, and deficient support in the ends, when the ship is on the crest of a wave, is not so great as at first appears, providing that the pressures in a wave are the same when the ship is in it as when the wave is undisturbed by the passage of the ship.

The question whether the pressures in a wave are much altered in their passage by the ship cannot be decided without noticing in which direction the ship is going in relation to the waves. A wave 600 feet long would travel at a speed of about 33 knots per hour. If a vessel of this length were travelling at 21 knots per hour in the

same direction as the wave, the crest would pass her from aft to forward at a speed of 12 knots per hour, and would take about 30 seconds to pass her. If, on the contrary, the wave be travelling in the opposite direction to the ship, it would pass her from forward to aft at 54 knots per hour, or in about 6¾ seconds. Hence the disturbance in the wave is likely to be much less in the former case than in the latter, though the action of the propeller or propellers in a steamship would cause some disturbance in the former case, but the effect of this might possibly have become reduced by the time the crest reached amidships.

The effect of pitching upon the pressures in the wave is not easy to determine, but it is evident that pitching will be much greater when the wave crest is passing the vessel once in 6¾ seconds than when passing only once in 30 seconds, more particularly if it happens that the pitching period of the ship is about 6¾ seconds. In this case synchronism of the waves with the ship's pitching will inevitably cause large angles of pitching motion which cannot fail to disturb the orbital motion of the particles of the wave.

We get a better idea of what is likely to happen by considering the wave form to be at rest and the whole ocean to be moving past it at 33 miles an hour. The water will flow through trochoidal channels as shown on Fig. 1, Plate III. The passage of the vessel *through* water will be 21 knots as before, but she will be moving in one case at 54 knots per hour ahead, and in the other at 12 knots astern, the water moving in trochoidal channels ahead in the former case, and astern in the latter. As the ship in the former case passes through the wave crest at 54 knots per hour ahead, and in the latter at 12 knots per hour astern, the water in the trochoidal channels will have less time to adapt itself to the form of the ship in the former case than in the latter, and there is likely to be more disturbance of the orbital motion. Hence it seems probable that with the wave moving in an opposite direction to the ship, the pressures more nearly approximate to those due to the depth below the surface than they will when the wave is going in the same direction. In the latter case the stress will be less, but it will be of

longer duration. In the former it will be nearly if not quite equal to what is got by neglecting the orbital motion, and will be much more frequently repeated. The stresses due to pitching will be greater and much more frequent in the former than in the latter condition, so that it seems probable that a vessel will experience stresses at least equal to those deduced by assuming her to be on a trochoidal surface instantaneously at rest throughout the whole of its depth, and that the maximum stresses will be experienced when going head to sea.

The above remarks are based upon the assumption that the vessel falls in with a regular series of waves of her own length. The frequency of such an event must be taken into account, but no very reliable information is at present available. From the results obtained by Lieut. Paris (some of which are given in Mr White's "Naval Architecture," 2nd edition, page 208) the average periods and lengths of waves in various seas can be obtained, and it may be seen that the average lengths vary from 180 to 450 feet in different localities. Lieut. Paris gives 348 feet long by 16½ feet high as the average dimensions of a wave corresponding to what sailors call a high sea, and 485 × 25½ a very high sea. We may, therefore, infer regular series of waves of 500 feet and upwards are not very frequently met by ships, but for purposes of comparison we may assume that the stresses which would be brought upon a vessel when poised on a wave of her own length, and of height one-twentieth of the length, ought to be provided for in the disposition of material in the structure.

In this condition it is assumed that all the coal and stores necessary to make an ordinary voyage have been consumed when the vessel falls in with the regular series of waves of her own length. Generally the vessel will be in a better condition than this as regards relative distribution of forces, as before the coal is consumed it is generally stowed in a part of the ship where buoyancy is in excess of weight, and consequently reduces the inequality of the upward and downward forces. It is also to be noted that some large ships have ballast tanks, the weight of the water in which, in the

parts where buoyancy exceeds weight, tend considerably to reduce the maximum bending moment. If the burning out of coal so modifies the stability as to make it desirable to fill the ballast tanks, it is to be noted that for strength purposes it is desirable to fill up those amidships, but it may seem to be desirable to fill some aft, in order to ensure proper immersion to the propellers, especially if the vessel is steaming in a sea which causes her to pitch and race. In this case the stresses will generally be greater than if the ballast tanks had been empty, and consequently may be greater than in the assumed standard condition already stated.

Having the distribution of forces determined, the curves of shearing force and bending moment can readily be obtained. The former is got by finding the area of the load curve up to successive chosen points, and setting up these results as ordinates at these points. The latter is obtained by treating the curve passed through the last set off results in the same way as the load curve is treated. Expressed in mathematical language, the shearing force curve is the integral of the load curve, and the bending moment curve is the integral of the shearing force curve. The bending moment amidships is generally the greatest, and the midship section is usually the only one whose strength is determined.

The ship is assumed to be a girder acted upon by the maximum bending moment, and the maximum stress is determined by the application of the formula—

$$\frac{p}{y} = \frac{M}{I}$$

where p is the stress at the distance y from the neutral axis, and I is the moment of inertia, about this axis, of the sectional area of the material which contributes to longitudinal strength; M is the bending moment.

In recording results of strength calculations, it has been preferred to reduce them to a form which renders them readily comparable with each other, independently of the size of the vessel considered.

If a scale of $\frac{1}{2}$-inch equals so many tons be used, it is apparent that the size of the diagram will vary with the size of the ship, and

in order to make any comparison, which depends on form or disposition of weight alone, the eye must involuntarily make an enlargement or reduction. To obviate the necessity of this, and to procure a ready means of comparison of all kinds of ships, the system adopted is as follows:—Section paper ruled to inches and tenths is always used. The length of all diagrams is 20 inches. The mean height of the weight and buoyancy curves is 3 inches, so that the scale of the length is 1 inch equals one-twentieth of the length of the ship in feet. The total displacement must equal the length multiplied by the mean ordinate of the buoyancy curve, so that $20 \times 3 = 60$ square inches will equal the displacement, and 1 square inch will represent one-sixtieth of the displacement.

The mean ordinate of the buoyancy curve will be the displacement divided by the length, and will be represented by 3 inches, so that the scale of tons per foot of length of ship will be 1 inch equals one-third of the displacement divided by the length.

The area of the load curve gives the ordinates of the shearing force curve, and 1 square inch of this area is set off as a half-an-inch on the shearing force curve. We have seen that 1 square inch of area in the weight and buoyancy curves equals the displacement divided by 60, so that 1 inch on the shearing force will equal displacement divided by 30.

The area of the shearing force curve gives the bending moment. One inch vertically on the shearing force equals displacement divided by 30. One inch horizontally equals length of ship divided by 20. Hence, 1 square inch on the shearing force curve—

$$= \frac{\text{displacement}}{30} \times \frac{\text{length}}{20}.$$

If we set off the ordinates of the bending moment curve so that one inch equals 3 square inches of the area of the shearing force curve, we shall have the bending moments on a scale of

$$1 \text{ in.} = 3 \times \frac{\text{displacement}}{30} \times \frac{\text{length}}{20}$$

$$= \frac{\text{displacement} \times \text{length}}{200} = \text{ft. tons.}$$

By setting off all results on these scales, we obtain diagrams whose absolute size is independent of the dimensions of the ship, and with which we can make direct comparisons of the effect of the differences of form and dispositions of weights in ships of different absolute dimensions.

The number of inches in the maximum ordinate of the bending moment curve divided into 200 gives the factor—

$$\frac{\text{displacement} \times \text{length}}{\text{bending moment}},$$

which is the usual measure of the severity of the bending moment.

On this system, though it is not necessary to have the actual dimensions of a ship, it is preferable to confine the comparison to vessels of about the same dimensions, and it is sufficient to have diagrams for typical cases, and to head them as for ships of about so many feet long.

Figs. 2, 3, 4, 5, Plates I. and II., show diagrams for cases which have been carefully worked out for definite sizes, but which may be considered as suitable to the types of about

500	feet,	which	we will call	A.
550	„	„	„	B.
600	„	„	„	C.
700	„	„	„	D.

In all these cases the effect of the orbital motion of the particles of the wave is neglected.

Fig. 2, Plate I., shows the curves of distribution of weight and buoyancy for the case A. The weight curve has been very carefully worked out, and all the weights are such as would be likely to go into a high speed Atlantic vessel of this size. The vessel is assumed to be 63 feet beam, and 42 feet to the upper deck at side. These dimensions are similar to those of existing Atlantic ships. Above the upper deck is a strong deck-house about eight feet from the side. The top of this deck-house, when extended to the ship's side, forms the promenade deck, as is usual in such ships. Calculations have been made in this case showing the stress at the upper deck—1, Supposing the promenade deck not to contribute in

any way to the longitudinal strength of the vessel; 2, supposing the promenade deck to be plated, and to contribute its utmost to the strength. The bending moment is usually shown at every point in the length of the ship, but as already stated the midship section is the only one whose strength is usually calculated. In this case, however, the values of I and y have been calculated at various points in the length of the ship and the stresses determined in the usual way. In this case the thickness of promenade deck plating is assumed to be six-twentieths of an inch. It should be noted that in the expression $p = \frac{yM}{I}$ the greater y is, the greater is the stress, so that bringing in the promenade deck plating increases the stress, unless the increase of I is greater proportionally than that of y. The following table shows the percentage increase of y and I throughout the ship in passing from the condition of excluding the promenade deck to that of including it:—

Position of section.	Percentage increase.		Percentage reduction on stress.
	I.	y.	
$\frac{3}{5}$ length aft,	47·3	22·3	13·8
$\frac{1}{2}$ length aft,	43·	23·5	13·6
Midships,	38·7	21·4	12·4
$\frac{1}{2}$ length forward,	38·	22·	12·
$\frac{3}{5}$ length forward,	35·	22·8	8·7

It will be seen that the reduction in stress due to properly plating this deck is 12½ per cent. amidships.

In order to get the full value of this plating, the side of the deck-house between the upper and promenade decks must be thoroughly well stiffened inside the house by web frames or some equivalent stiffening. The sides of the deck must be well supported by stancheons having good connections to the upper deck sheer strake, the promenade deck beams, and the wash plate. If the plating of the promenade deck be of such a thickness that the value of I is

not increased as much as y, then the stress upon the promenade deck plating will be greater than the stress would have been had the promenade deck not been plated.

Fig. 3B, Plate II., shows the bending moment and shearing forces upon the case B. The depth is assumed to be the same as in the shorter vessel A, and the beam has been reduced in the same proportion as the length has been increased. This alteration of beam has necessitated changes in the internal arrangements of the vessel, and the general character of existing vessels of about these dimensions has been assumed in making these calculations. The increase in the proportion of length to breadth is accompanied by an increase in the bending moment of 18·7 per cent., but the moment of inertia of the section is 11 per cent. less.

Hence the stress neglecting the promenade deck has been increased amidships at least 33 per cent.

If we add a promenade deck $\frac{5}{10}$ths in. thick for the breadth of the deck-house, the stress on this deck will be 8 per cent. more than it would be at the upper deck if the promenade deck had not been plated.

Fig. 4C, Plate II., shows the shearing forces and bending moments of C. The depth is the same as in the other two cases, A and B. The beam has been increased to 65 feet. The general arrangement of existing vessels of about this size has been followed.

The bending moment in C is 67 per cent. more than in A, and 40 per cent. more than in B. The moment of inertia of the section, neglecting the promenade deck, is 4 per cent. more than in A, and 17 per cent. more than in B, the maximum stress being 68 per cent. and 14 per cent. in excess respectively of A and B.

If the promenade deck be assumed to be $\frac{6}{10}$ths, the same thickness as in case A, the stress upon this deck will be $3\frac{1}{2}$ per cent. more than upon the upper deck, when the effect of promenade deck is neglected.

Hence it is seen that a thickness, sufficient in case A, is not sufficient in case C to reduce the maximum stress, as the value of I up to the upper deck is such that a greater thickness of

promenade deck plating becomes necessary to increase I proportionally as much as y is increased.

It may be interesting to note the effect of taking account of the orbital motion of the particles in the wave. Ship A will sink bodily into the wave 22 inches if the passage of the ship into the wave does not alter these pressures. The variation in supporting force is shown by the dotted line in Fig. 2, Plate I. The alteration due to this change is shown in the curve of bending moment in Fig. 2A, Plate I., by a dotted line. The maximum bending moment is reduced 13 per cent., and the stress the same amount.

These figures are based upon assumptions as to form and scantlings, which may not exactly hold in existing ships. The differences in the bending moments are more likely to be accurate than those in the moments of inertia, but these latter are probably not very far from representing actual practice.

It will be seen, then, that as the length of ship is increased the moment of inertia must also be increased, if the standard of strength of the case A is to be maintained. It is seen that the strengthening given by the promenade deck plating in A is not sufficient in the cases of B and C, and cannot be relied on to reduce the stress unless its thickness is increased. Last year the opportunity was afforded me of discussing somewhat fully the question of best dimensions for fast Atlantic ships. In pointing out that the strength question was the most difficult one in the way of successfully running vessels of increased length, it was necessary to say :—

"It has been assumed in this case that the promenade deck will be the strongest deck in the ship, and that the promenade deck sheer strake will consequently be the main sheer strake. What now corresponds to the upper or saloon deck-house should be carried out to the sides of the ship."

The depth then considered, in view of this condition, was 52 feet 6 inches to promenade deck, as against 42 feet to upper deck, the greatest depth in existing ships of this class. The effect of this increased depth is to necessitate a beam of 67 feet. In a vessel 600 feet long of this depth and breadth, and with internal re-arrange-

ments which necessarily followed, the moment of inertia was increased 73 per cent. above that in the case C, which is 42 feet deep, and the stress was reduced 20 per cent.

Wishing to see the effect of a further increase of depth, a design was prepared of the same length, 600 feet, 70 feet beam, and 56½ feet deep. The I was increased 109 per cent, and the stress reduced 30 per cent. from that in C.

The question then naturally presented itself:—What would be the effect of a considerable increase of length upon the strength of such a section? and the necessary calculations were made for a vessel 700 feet long, with the same structural midship section, with the result that the stress was found to be about the same as in C.

All these calculations are made upon the same assumptions as to proportion of height to length of wave, so that it may be seen that it is quite practicable to produce a ship as strong as existing ships, but of considerably greater length.

It need hardly be pointed out that the condition of weight carrying necessary to produce a practicable working vessel, have been kept in view in preparing the outline designs upon which the necessary calculations were based. The weight of hull, in relation to product of moulded dimensions (depth being taken in each case to promenade deck), is rather less in the case of D than in any of the others.

It may be interesting to notice a little more particularly the diagram (Fig. 2, Plate I.) which shows the variation in stress through the length of the ship. Taking the stress amidships as 100, we see that at half-length it is reduced—forward to 45, and aft to 58. The stress is less than three-fourths of the maximum beyond one-third of the length amidships.

The shearing stress is a maximum at about one-half length aft. The mean shearing stress on this section is only about one-fourth of the maximum tensile stress. The maximum shearing stress is about 50 per cent. more than the mean, or about 39 per cent. of the maximum tensional stress on this section.

In other words, the maximum shearing is in no case more than

23 per cent. of the maximum tension in the ship. The shearing stress in the other cases, B, C, D, will not be a greater percentage of the maximum tensional strains. The maximum shearing stress does not occur at the same section of the ship as the maximum tension, so that the two stresses are not likely, together, to be greater than the maximum tensional stress.

The maximum compressive stress is less amidships than the tensional, though it is slightly greater in the ends; but it falls off almost as rapidly in the ends as in the tensional. It is hardly necessary to say that the maximum tensional is assumed to be at the gunwale amidships, and the maximum compression is at the keel. If the ship is on the hollow of a wave, with her ends resting on two crests, the tensional and compressive strains change places, but are not so great in amount as when the ship is on the crest.

When a ship is crossing a regular series of waves of her own length she is likely to remain upright, and the assumptions upon which the foregoing remarks are based are likely to be reasonable. If, however, she crosses a series of waves obliquely, they will probably cause her to roll, and she will be strained by the inequality of weight and support in planes not parallel to the longitudinal middle-line plane. In this case, however, the waves must be shorter, and most probably not so high, so that the longitudinal stresses due to crossing the crest of the waves will be reduced. The stresses when the vessel is heeled over will be increased on account of the heeling. By the method first proposed by my predecessor, the late Professor Jenkins, the increase of moment of inertia due to the vessel being inclined has been determined, and the value of the stress from the upright to 90 degrees of inclination has been plotted, upon the assumption that he made that the bending moment remains unaltered. This is shown in Fig. 6A, Plate III. The curve below the 45 degrees line shows the angle of inclination of the neutral axis. The distance between this curve and the line inclined at 45 degrees shows how much the neutral axis lags behind as the vessel is being inclined. The other curves show the relative

stress at various angles of heel. The upper curve is made supposing the promenade deck to be neglected. The lower one shows the effect of including it. From these curves it will be seen that the stress may be 20 per cent. greater in the inclined than in the upright, and that the maximum is at about 30 degrees.

To determine the accuracy of the assumption that the bending moment is not much altered when the ship is heeled, the vessel has been placed upon a wave of the same height as in the previous calculations, but set across the wave at various angles to the crest. The ship is also inclined at several angles of heel. The pressures due to orbital motion have been taken account of, and some results have been obtained, but as the calculations are not yet completed it will be well to postpone a discussion of the question to a future occasion.

I should like to take this opportunity of saying that the working out of the first results that are within my knowledge for a ship resting obliquely on a wave and inclined in it has been done in the University Naval Architecture Class by Messrs Zahm and Ferguson, two American naval officers, who have been sent here to study naval architecture. These problems are very interesting to the students as exercises in geometry and mechanics, and I venture to think that the setting of a succession of such problems to capable and intelligent students is a sure way to develope their energies and give them interest in and enthusiasm for their profession, and they thereby contribute useful work to the advancement of the science.

There is one important question which has not been touched upon in this paper—viz., the maximum stress which should be provided against in a large ship. This can only be decided by experience, and that experience can only, at present, be gained with certainty by building, by accident or intention, ships that are weak. If every ship is tried under the standard test conditions of being on a wave of her own length and one-twentieth of it in height, and the stress be found, we shall have a *relative* measure of the capability of the ship to resist stress. If we find that in ships of about the same length one shows a higher stress per square inch than the other, and

in spite of it does her work successfully, we may fairly assume that in a new structure the higher stress is permissible.

Large ships are running whose maximum stress under standard conditions exceeds 10 tons per square inch.

Large Atlantic ships have been known to show signs of weakness in their structure with as great a stress as this, but there are large ships running in other trades whose stress is quite as high under standard conditions. Large Atlantic ships with a stress of 9 tons have been successfully running for some years.

As lengths of ships increase, the frequency of falling in with standard conditions is less, and the permissible maximum standard stress may be allowed to be greater than even 10 tons for Atlantic work.

It must not be inferred that a stress of 10 tons could with certainty be borne under standard conditions by a ship. The fact that the results of calculation show that a stress of 10 tons will probably be brought upon a ship under standard conditions points to the fact that these standard conditions are not frequently realised in the actual work of the ship, and the problem that may well be set for solution is: What conditions of sea are necessary to produce a stress which experience in structures on shore shows should not be exceeded? Or, suppose that the stress in case A is taken as a standard, what variation of dimensions of waves is necessary to insure that the stresses in the other cases shall not exceed the standard stress? The reduction from stress in standard conditions of length and height of wave can be obtained by reducing the length of the waves so that the ships are on waves less than their own length; or by reducing the height of the wave, maintaining the length the same as that of the ship.

It may be urged that the method of determining the maximum stress does not take account of twisting and racking strains that come upon a vessel; that the heave of the sea and pitching may increase the so-called maximum tensional and compressive strains; that in providing sufficient material, and in disposing of it so as to obtain p as small as possible in the formula, $p = y \frac{M}{I}$, we

may neglect to put material in places where it ought to be put, to resist these other strains. But it will obviously be necessary to put in sufficient stiffening in the form of framing, beams, and pillars, to ensure that the material which contributes to longitudinal strength is kept practically rigidly to its proper place, and when this has been done, it has been found that ample provision is made for twisting and racking strains. It is also to be noted that the torsional rigidity of ship sections, which may be taken as varying from rectangles to triangles, is always greater than the longitudinal rigidity which the structure possesses to resist bending, while the twisting moment can never be anything like so great as the bending moment.

This paper has involved more time and work than was originally contemplated, or there would have been included in it some investigations of the stresses due to pitching, which can be determined from some of the data already given. The difficulty of obtaining experimental data upon which to base the resistance due to pitching, will, it is hoped, be lessened when some experiments, now in progress, are completed. One thing, however, seems to be certain, that in future large ships it will be very desirable to more carefully consider the reducing of scantlings between amidships and the ends, than has hitherto been done, with a view to taking weight out of the ends of the ship, and thereby reducing the main stresses. Provision for local stresses must always be made, but the provision should be local, and not general, or it may do more harm than good.

The subject of pitching, the results of the stresses in inclined positions, and possibly some experimental results upon heaving, may be given on a future day. It is to be regretted that the means of experimental investigation of so important a subject do not exist in the University of Glasgow.

The consideration of this subject of strength of large ships may be considered by some to be, at the best, premature, because the probability of making such large ships pay is remote. The business of commercial management of steamships is usually, and should always be, carried on by skilled shipowners, who would not com-

mence any commercial venture without some reasonable hope of making it a success. If they get from the naval architect a statement as to the possibilities of ship and engine construction, they should be able to tell beforehand what commercial conditions will have to be fulfilled in their business, in order that any project may be a success. The impossibility of determining with certainty what is going to happen in the future, is not peculiar to a shipowning business, even of the high speed class, and if the commercial conditions which were, or might have been, seen to be essential to commercial success do not happen to be fulfilled, it seems a little illogical to say that the naval architect should no more consider possible improvements because the shipowner, in common with most other people of enterprise, is at the present time experiencing reverses. If many of the large shipping companies are not making money, and their fleets are made up in the aggregate of high speed, medium speed, and low speed vessels, it requires more than a superficial investigation to say that the want of profit is due to excessive speed. At any rate there are companies possessing high speed ships who are adding high speed ships to their fleets, and there are fleets in which high speed ships make money, while low speed ships do not, so that there may still be a future in which it will be prudent to build a fast ship rather than a slow one, and in which a full understanding of the question of the strength of large ships may be an important item in the matter, not only of speed, but of commercial efficiency.

The discussion of this paper took place on 19th December, 1893.

Mr F. P. PURVIS said the paper was perhaps more interesting for what it did not say than what it did say. As a paper of method he thought it a very valuable one indeed. Some points suggested themselves to him as worthy of further treatment—for instance, these curves of shearing forces and bending moments, when one is working them out, have a very nasty way of starting all right at the one end of the ship, and not coming back to the base line at the other end of the ship, and it is rather a curious bit of investi-

gation to get an easy method of correction to avoid doing all the work over again. Under the assumed conditions, Professor Biles speaks of ten tons at the gunwale of an Atlantic going steamer, and even more for a very large-sized vessel. That stress, large as it appeared, was, he knew, borne out by the experience of others who had had occasion to investigate stresses of this sort, worked out on the same conditions as Professor Biles lays down. One point he should like to ask him is, how is the moment of inertia calculated—has he in the parts under tension included the rivet area? The late William Denny, in one of his characteristic suggestions, proposed that we should make no deduction for rivets in the parts under tension. The effect of not doing so would be that the stresses worked out would be very considerably higher; probably Professor Biles' ten tons would come nearer twelve tons, and what Mr Denny said rightly was, that if we all made no deduction—and it was generally understood we were all making none—we could compare our results, and should be equally well off as now in such comparison, which is the chief thing aimed at. But besides the gain in simplicity and time, there would be a distinct advantage if we could get every one to stop making the deduction, because at present one wants not one moment of inertia, but three: (1) with the top part under tension; (2) the top part under compression and lower part under tension; and (3) that which Mr Denny desired—viz., a moment of inertia without any deductions at all, because when one is working out questions of stiffness there is no doubt one gets nearer the truth by not deducting the rivet area than by making a deduction for the rivet area. One result to which Professor Biles points is, that in a ship of the size of the "Campania" no gain is got by bringing the promenade deck into part of the structure unless the plating on the promenade deck is over six-twentieths in thickness. That is a result that is certainly of interest, but he might have told us something further; for instance, the question of stiffness is second only to the question of strength, and giving a promenade deck even of six-twentieths of an inch into part of the structure, although it did not increase the strength of the hull,

would enormously add to the stiffness, and there is no doubt that the time has come when stiffness, vibration, and the engine revolutions should be related to one another by some, at least tentative, law. Professor Biles gives a very interesting diagram that was originally suggested by a method of the late Professor Jenkins. Professor Jenkins, in a paper to the Institute of Naval Architecture, rather alarmed us all by giving considerations tending to prove that we do not attend sufficiently to the shearing stresses, and that these shearing stresses would account for a good deal of the mischief that goes on in ships near the neutral axis, about the bilgestrake. Professor Biles seems to find in his particular investigations that these stresses are of distinctly minor importance compared with the tensile stresses.

Mr STROMEYER said he could not believe that Professor Biles actually meant that the stresses in a ship were 10 tons per square inch, but that he only intended this value to be a basis of comparison, for with such a stress existing in a ship of 500 feet in length, her longitudinal curvature would be sufficient to cause the two ends to spring up or down through a range of 20 inches, and he thought that was very much more than had ever been observed, at least while such a vessel was passing through a series of large waves. He had been at sea only in comparatively small ships—the vessels were about 300 feet long—and he tried to watch whether there were any deflections, but never found more than 2 or 3 inches. If there had been 10 tons of stress in the gunwales, the deflections would have been about 10 inches. He thought that the results of these calculations were very valuable for comparative purposes, but that the 10 tons mentioned was rather an excessive value. Professor Biles made a statement with which he did not agree—viz., that in order to gain experience on these points one would have to build a weak ship either accidentally or intentionally. He could not believe that any one would ever deliberately build a weak vessel and send her into mid-ocean in winter, and it would be a great pity if one were built accidentally. Professor Biles had evidently forgotten that in 1886 he took part

in a discussion at a meeting of the Institute of Naval Architecture at which he (Mr Stromeyer) showed some instruments for determining these stresses, and had proved by actually taking measurements at sea that one could measure the variations of strains in a ship either while being launched or docked, and also at sea. As regards the last of these experiments, the vessel was about 250 feet long, the waves were about 4 feet high, and the stresses amidships, close under the main deck, amounted to about 600 or 700 pounds per square inch. He had hoped then, from the remarks which Professor Biles and Mr Inglis made, that shipbuilders were on the point of using these instruments for investigating these stresses, and that they would send these instruments to sea to obtain measurements, but he was sorry to say the only person who had done that, was himself. Bridge builders had been more inquisitive, and had used several of these instruments. They had been used in the Forth Bridge, Blackfriars Bridge, and Indian railways, and as far as he could hear, the results agreed with the theories about those bridges, which was satisfactory both for instruments and theories. In regard to the question of moment of inertia of the midship section which had been mentioned, he should like to refer the members to the above-mentioned paper. One of the experiments which he carried out, and which was detailed there, was in the steamship "Hooper" —she is now called the "Silvertown." He fixed five instruments horizontally down the side of the ship to ascertain the variation of stresses from top to bottom. There were really two sets of experiments which could be used for determining the neutral axis of the ship. The results of both two differed by about two or three inches from the calculated neutral fibre. He had taken the solid plates without any deductions for rivet holes, and he thought that this experiment would confirm Mr Denny's views that the rivet holes should not be deducted. At the same time that he read that paper he pointed out that the usual method of measuring the waves was one of great difficulty and uncertainty, particularly if they are not as high as the deck. It had been suggested that very sensitive barometers should be used, and they would indicate the rise and

fall of the vessel, but they would not give the real height of the wave, only the effective height. Therefore, in order to remove this difficulty, and to make the experiments at sea complete, he had worked out the problem of measuring the height of waves, and believed that his method was a practical one, for the only really important determination was to note when the back slope of an advancing wave became visible, and that was not difficult. Another point to which Professor Biles had referred was the effect of the rising and the falling of the vessel on its effective weight. He thought the simplest plan for obtaining reliable data on this point was to make experiments. They would be of a very simple nature. Suppose the ship rises and falls a few feet with each wave, and suppose a heavy weight is suspended on a strong balance, then this weight will appear to be either a few per cent. heavier or lighter than it actually is. Suppose that the balance shows a mean weight of 100 pounds, then when the ship is at the bottom of the wave it will appear to weigh 110 pounds, and when it is on the crest of the wave it will weigh only about 90. Of course the effective weight of the ship would vary in the same way, at least near the centre, and this would give one a means of arriving at one of the problems that Professor Biles has set himself to solve. If the instruments were placed at the end of the ship they would show the effect of the pitching of the vessel. Professor Biles mentioned Mr Smith's investigations about the variation of the water pressure while it was in motion—viz., that the water pressure did not increase uniformly with the depth as it would do if it were stationary. This disturbance is of course due to the centrifugal motion of the water. The crest is flying upwards as it were, and the hollow is pressing downwards, which produces the same effect as if gravity were passing through local changes. He quite agreed with Mr Smith's conclusions, but he thought that one ought to take into account the extra immersion of the vessel when passing over a wave. While the wave passes under the ship it has a lifting effect on it, because the ship rises, and evidently the ship is deeper immersed then than would be due to its weight, and when it gets in the hollow it sinks

again, which is an indication that the vessel is momentarily too light. The faster a ship is going through the water, the more nearly she will retain an average position, and every time a wave passes she will be temporarily more than supported and sometimes not sufficiently supported. He thought that in a great measure would counteract the centrifugal action which Mr Smith had mentioned.

Mr JOHN THOM said he only wanted to draw attention to a remark made by Mr Purvis that from the diagram shown by Professor Biles it becomes a simple thing to design a ship strong enough for going over the waves, but it becomes a rather more difficult thing to design a ship to stand the vibration due to the engines. Mr Purvis, he thought, mentioned that the revolutions of the engines had something to do with the vibration, and that might be, but suppose you have a perfectly balanced engine, the revolutions should have nothing practically to do with it. If engines are designed so that the centre of gravity of the moving parts move up and down, the ship *must* move up and down in the same way to a certain extent. If engineers will insist in building these sort of engines, can an able architect calculate what extra strength must be put on the vessel to avoid this vibration? He thought it was pretty well known that there were two ways to avoid vibration. You can either make a ship so strong that it will not vibrate much, or make the engines so that they will have no tendency to make the ship vibrate.

Mr ARCHER said they were much indebted to Professor Biles for his paper, and there were one or two points which would very much add to the value of it if Professor Biles could give them a little further information. He had given them four ships, A, B, C, and D. On reading through the paper he did not quite understand whether the scantlings were assumed to be the same in each case, or whether the scantlings had been taken somewhat similar to the scantlings of the existing ships, which are approximately of the same dimensions. Perhaps it was asking too much, but he thought if Professor Biles could give them the scantlings which he had

assumed, it would add very much to the value of the paper. With regard to the weight of the hull, machinery, coals, and cargo, on the last occasion we had, he thought, a table showing some of these particulars, but he did not see it in the printed paper, and he thought that it would also add very much to the value of the paper if Professor Biles could give them that information. With regard to the weight of the hull, the paper stated, on page 50, "The weight of the hull in relation to product of moulded dimensions (depth being taken in each case to promenade deck) is rather less in the case of D than in any of the others." That led one to believe that the weight of the hull had been based on the product of the dimensions of the vessels. It seemed that was hardly a fair way to do, because in the case of the ship D the thick shell plating was continued up to the promenade deck, whereas in the ships A, B, C, the thick plating was stopped at the upper deck, and then there was probably a light superstructure above, so that it seemed at first sight that it was not a fair way of determining the weight. With regard to the point that Mr Purvis mentioned about the deduction of the rivet holes, and so on, Professor Biles had, he thought, hardly made it clear enough that the figures which he had arrived at representing the maximum stresses did not represent the absolute stresses, but were merely figures representing comparative stresses.

The further discussion of this subject was adjourned to the following meeting.

The discussion of this paper was resumed on 23rd January, 1894.

Mr Stromeyer said that in consequence of his remarks at the last meeting several members had requested him to explain more fully the working of his strain indicator, and he had much pleasure in being able to show a pair of these instruments to-night. They were not of so simple a design as those intended for use on vessels, for they had been constructed with the object in view of using them on solid structures, such as crank shafts, connecting rods, &c., as well as on test pieces, and contrivances had to be introduced both for

inserting and removing the rolling pins quickly, for preventing these from rocking, and a differential micrometer for callibrating the rolling pins had also been added, and a stop for adjusting the length of the centres of the instruments. The instrument which was exhibited at the meeting consisted of a pair of strain indicators, one attached to either side of a 1½ inch gas pipe 3 feet long (see Fig. 2, Plate VII.). On supporting the pipe at A and C, and bringing his own weight to bear at B, compression and tension stresses were produced respectively in the top and bottom fibles of the pipe, *p*, *p*, causing the pointers, P_1 and P_2, to move in the directions indicated by the arrows through angles of about 15 to 20 degrees. Each strain indicator consists essentially of two flat bars, b_1 and b_2, which are pressed together by means of a spring after the rolling pin, R, to which the pointer, P_1, is attached, has been inserted between them. Any relative sliding motion of the two bars, b_1, b_2, will produce a rolling motion of the rolling pin, R, and cause the pointer, P_1, to move through a definite angle. The leverage of the pointer and rolling pin is about 1500, but could be made larger or smaller according to the size of the rolling pin, which is made of hardened steel wire. Sewing needles should not be used, as they are not always perfectly cylindrical, nor are they parallel. Pointed centres, c_1 and c_2, are screwed into the ends of each bar, b_1 and b_2, and are embedded into the metal of the gas pipe, test piece, or other structure by means of elastic clamps, and any elongation of the metal between the points c_1 and c_2 will produce a sliding motion of b_1 on b_2, and a rolling motion of the rolling pin, R, and the pointer, P_1. In the particular instrument shown at the meeting the distance c_1 to c_2 could be adjusted to lengths varying from 6 inches to a few feet. For longer spans, which are more convenient on ships and on bridges, the centres c_1 and c_2 are replaced by small clamps, which are attached to the angle frames or other structures. The plate, b_1, is replaced by a small angle iron, B_1 (Fig. 3), and b_2 by a flat plate, B_2, one end of which is hooked on to a wire, W, W, leading across the span in which the strain is to be measured, and its other end is attached to a spring, S, which serves the double purpose of stretching the wire,

W, W, and of pressing B_2 firmly down on the rolling pin, R, which is lying on the angle iron, B_1. Any slight motion of the point, X, in the direction of the arrow will move the plate, B_2, and cause the rolling pin, R, and its pointer, P, to move in the direction of the arrow, the angle being a measure of the strain, from which the stress producing it can then be calculated. The instruments used in the experiments which are detailed in the Transactions of the Institution of Naval Architects were so adjusted that each inch through which a pointer moved on the dial represented a stress of about 250 lbs. per square inch. A stress of 10 tons would therefore correspond to a motion of the pointers through 90 inches, equal to $4\frac{1}{2}$ revolutions of the rolling pin. Even in this instrument several refinements have had to be introduced, as it was found that the wire W stretched and the plate B_2 rocked during the experiments.

Mr CAREY stated that he was able to bear out everything that had fallen from Mr Stromeyer on the subject of his gauge. He had experience of it originally on bridge work. On the Forth Bridge they had an instrument made by Mr Stromeyer for trying the strains, and it was of even simpler construction than the gauge that Mr Stromeyer had shown them. It was simply two sliding surfaces with a wire between them of hardened steel and a pointer at right angles. At the end of each sliding surface there was a clip so that the gauge was able to be clipped on anywhere. The only trouble with the instrument, so far as his experience went, was its extreme sensitiveness. It had to be constantly shielded from the wind. That difficulty was got over by constructing a small glass case in which it was enclosed, and it was then able to work free from any disturbance from the wind. The first time it was used they were extremely pleased with the accurate results it gave. In doing some lifting work they knew precisely, or at least as far as calculations were able to give them, the exact strain on some bars, and the Stromeyer gauge gave them a reading which exactly corresponded to the second place of decimals with the strain that was on them. Of course this extreme accuracy was only chance. Had it not been so accurate they would have been pleased, but it showed how closely

the gauge was able to work. They also applied it largely for checking the strains in the testing machines. It was very simple. They knew the absolute strain upon the specimen and they were able to test the gauge, which was merely clipped on to the specimen itself in the machine, and in all cases they found it working out very closely. It seemed to him that the gauge had only to be better known to come into general use. It was fastened on to anything so easily and registered the strain so accurately that he was surprised it had not come into more general use. There could be nothing more interesting than to place it on any bridge or structure and watch the strain as any vehicle or train passed over that structure.

Mr R. T. NAPIER said that they were very much indebted to Professor Biles for bringing this subject before them. It was not every one who had the time or the ability to go through the calculations. It was very tedious making a diagram showing the distribution of weight in a ship, and it was only those who had tried to calculate it who knew the work that was involved. Professor Biles had a staff of good students, and it was a good thing that he was able to put them to such useful work. He hoped that this would only be the first of a series of papers by Professor Biles now that he had time to devote to the subject. A previous speaker seemed to have misunderstood the Professor's way of putting the number of tons per square inch. Professor Biles had never said that a stress of 10 tons on the square inch was actually experienced by some Atlantic steamers, but simply that if they met a wave of certain dimensions the stress would amount to that, and he thought it was hardly likely that such waves were met with. He had not been on a large liner at sea during severe weather, but he supposed the movement of the upper works would be very considerable, and that the bulk of shipbuilders when asked what strain would come on would have to confess that they knew little about it. He thought this work of Professor Biles' was of the very first importance, and he would like him to add to his paper by giving his bending moments in the familiar terms of the length multiplied by the displacement.

He would also like Professor Biles to say what percentage of strength he had taken for the riveting of joints on the top side, because that was not a point that every one was agreed upon. Few butt joints in a ship were more than three-fourths of the strength of the plate. He had occasion to look into the question of riveting up the top side of a vessel of light construction, and found to his surprise that there was no use trying to use a triple riveted double butt strap, because with the rivets spaced to meet the conditions of strength the pitch was too great to allow of the outer strap being caulked.

Mr ARCHIBALD DENNY said that Professor Biles had gathered into a short space a great part of what was known of this subject. Professor Biles mentioned that they had from time to time been alarmed by highly scientific and mathematical papers written to prove that their previous basis of the ordinary calculations of stress were in error, but one by one these had been qualified, and he had had the pleasure himself of assisting in this in a paper on "Strength of Steamers," read at the Institution of Naval Architects, in 1892, when he again proved the value of the old and simple method. He saw in the reports that there had been some criticism of Professor Biles' remark that the only way they could decide was by experience, or by some one building by accident or intention a ship that was too weak, and certainly they would then learn what the limit was. He could not say that he would build a ship too weak intentionally, but there was one case he had in his mind—a ship about 400 feet long, fitted with a citadel bridge. That citadel extended for more than half the length of the vessel, and, while it was not too weak, the deck plans showed a certain amount of working, and a certain amount of moisture came through. They cured that in the next vessel by putting on plating on the bridge deck, which was now the usual practice. On that ship the stress on the bridge was 11 tons. These figures for stress were merely factors, and they could not tell with certainty what stress came on. Mr Stromeyer gave them very valuable information, and he would endeavour to use one of his instruments. Generally in launching they took the deflection of the vessel going down the ways and measured it con-

tinuously, and he had no doubt that Mr Stromeyer's instrument would save them a considerable amount of trouble. As to what happened in a vessel at sea, he once crossed the Atlantic for the purpose of seeing what occurred. It was on a fairly large ship, and there happened to be a long house on the top of another long house. The upper house had a heavy steel coaming, but it had been broken by stress at sea, and the superintendent engineer knew that it was no use riveting a butt strap on it. He put a covering plate on with the oval holes so that the coaming could work as it liked. With very heavy weather he noticed that the coaming opened and closed five-sixteenths of an inch. All the ships in Liverpool at that time which were of large dimensions showed the same defect. Some of them were broken in as many as three places, principally in the runners at the top of the long deck house, at saloon doors, etc. Now, the ships were being built with these decks much stronger, and plated, and he thought Professor Biles was perfectly correct when he said that the time was now come when they should carry the strength a deck higher. His own experience was that when they got a ship not for classification they could use their own judgment, and produce a better result with less weight. In a ship 330 by 42 by 34, an exceptional depth, they had no complete steel deck on that ship whatever. The strength deck was the top deck, and they had steel plating which extended for rather more than half the length, and the next deck was in the way of the machinery, only on both decks they had diagonal ties. That ship had been perfectly successful, and the plating was fully a sixteenth thinner, except at the top and bottom, than a classed ship, and the stress on her was 9 tons. It is but right to say that she was not engaged in a very heavy trade, and she steamed about 14 knots. The figure 10 tons was to him no surprise whatever. Professor Biles drew attention to a point which might be overlooked by many, but if they did any amount of work in these calculations they would find it necessary to consider that sometimes in adding material they did not necessarily strengthen the ship, although Mr Purvis drew attention to the fact that they would add to the stiffness. Altogether he was very much

indebted to Professor Biles for bringing this matter before them, and he hoped that he would give them the results of a ship placed diagonally in a wave, when his calculations were finished.

Mr A. S. BIGGART said that if Professor Biles had been here he intended to ask him whether in the case of a ship resting on two waves instead of one, the stresses would be reversed. He supposed that that must be so; but he could not say. If it was so, then the probable stress of 10 tons per square inch referred to must have an additional stress added to it so far as destruction with regard to the life of steel was concerned. He did not wonder at all that a stress of 10 tons was referred to as not being the limit that steel could safely stand, because in many cases they knew within their own experience that temporary structures were often subjected to a far greater stress than 10 tons per square inch, and without evil results. With regard to ships these were not so stiff as the top boom, say, of a girder or a well-designed strut that was intended to take up compressive stresses. They could not put as heavy a stress per square inch upon a ship as on such parts of a girder. He had himself seen a girder that was subjected to a stress under continuous work of about 17 tons per square inch, by calculation, and there was no doubt that it must have been something like that, because the girder took a permanent set under its work. After it had taken this set, it was kept at the same work for many years, to his own knowledge, day and night, and no further permanent set took place as far as they could see. It carried out its work just as well as if it had been working at 7 tons instead of 17. He supposed that there were no engineers who would ever think of putting a stress of 17 tons on any permanent work, but it showed what might be put on the material when they limited the stresses to a comparatively small number. When Professor Biles was referring to 10 tons per square inch not being the limit, they must remember that these stresses were stresses that would only be applied at rare intervals. In that lay the safety of applying a high stress to any material such as steel.

Professor BARR said that in connection with what Mr Biggart

referred to he thought a stress of 10 tons would not damage the steel. He believed that they might apply a stress below the elastic limit any number of times. He would judge from the best information that was available to him that a stress of 10 tons per square inch applied an infinite number of times would not damage a piece of good mild steel.

Mr STROMEYER believed that materials gave way if the alternate stresses were a little below the elastic limit—not very much; but he thought that the most important point about these experiments was that they showed that one could repeatedly strain materials beyond the ordinary extreme limit if the strain was never reversed. With an elastic limit of 15 tons materials would soon break down if they changed the stresses from 15 tons tension to 15 tons compression repeatedly, and to be safe one would have to keep the stresses within 10 tons per square inch. If one only had tension stresses and no compression stresses, or *vice versa*, he thought one could go above 15 tons, and even up to 18 and more; it depended upon the material. Although much had been written on the subject he did not know whether any definite relation had been detected between the elastic limit and other properties of materials and their power to resist fatigue. Some time ago he had occasion to experiment with a steel tail shaft which had cracked near the coupling flange, and he had sent some of the metal to Professor Unwin, who wrote back that it was absolutely rotten, but whether that was due to the fatigue produced by the running of the engines, or whether the shaft had not been forged properly at the coupling where these cracks showed, he did not know.

The CHAIRMAN said that the unfortunate circumstance of the absence of the President would detract very much from the value of the remarks that might have come from the Chair with regard to Professor Biles' paper. He was sorry that he had not had time to study the paper. He had only had an opportunity of glancing over it, and he had only heard the remarks that had been made to-night. He wished he had been present at the earlier discussion. The question was a most interesting one. In the last few years his

experience in the carrying of liquid cargoes had brought him to put a greater value upon the workmanship, as there was nothing he knew of that put a greater strain upon a vessel than the carrying of liquid cargo. He thought that the steamer that was carrying a liquid cargo, according to the sea she was in, might be like an accordion between their hands as she rolled from one side to the other. Some one more capable than himself might go into that question and bring it before the Institution, but it was one that had never been thoroughly studied by men who had science at their command and experience at their disposal. With regard to the question of the construction of the great vessels, only the other day in running on board one of the biggest he could not help thinking to himself that the designer of her had certainly made a good bottom to his girder, and a good top member also, so to speak, in the way of light deck erections, but he was of opinion that an error had been committed in making the light superstructures continuous instead of dividing them into sections in their length. That ship would have had no indication of weakness had it not been for her superstructure, and had her superstructure gone 20 feet higher they would not know what would have been the result. The workmanship was as good as could be got, but still he maintained that in these greater structures they wanted more attention to the class of rivet and the perfection of the riveting. He did not know that he had much more to say, except to refer to Mr Carey's remarks on Mr Stromeyer's instrument. He was sure that Mr Stromeyer would be very glad to reciprocate. As far as Mr Carey had gone, he had told them that Mr Stromeyer's instrument came within the second decimal of his figures, and he was perfectly satisfied that Mr Stromeyer would be quite agreeable to admit that. He was sure that they would accord a most hearty vote of thanks to Professor Biles for the paper he had read on this very interesting subject, and that they all wished he would extend his experience and put it at the disposal of the Institution.

Mr ARCHIBALD DENNY said that he had the Vice-President's permission to say another word. They cut a long bridge house right

through down to the upper sheerstrake, and allowed the whole to work. In launching that ship they took a lead wedge and put it in the cut at the bridge sheerstrake, and when she was launched she closed up and squeezed the wedge from three-eighths to an eighth—that is, the cut closed one quarter of an inch.

Mr MOLLISON suggested that the discussion on this paper might be kept open in case the President might wish to say something about it. They all knew that the President took a great interest in such matters as this. Professor Biles expected to be present next evening, and the discussion might then be continued.

It was then agreed to adjourn the discussion till next general meeting.

The discussion of this paper was resumed on 20th February, 1894.

Professor BILES, in replying to the discussion, said that he had to thank the members of the Institution for the reception they had given to his paper. The subject was a somewhat intricate one, and considering the difficulty of the subject he was sure they would deserve all the thanks that he could give them for having given so much consideration to it as they had. The discussion had taken the turn that one would naturally expect it to take, and that was to attract attention to the stress that he had named, ten tons, as being the permissible stress upon a large ship. Some of the criticism was rather devoted to the statement that he made that ten tons was a stress that could be brought upon a ship if there was space on a wave such as they assumed to be a standard wave. He was not sure that a ship had experienced such a stress; he did not think any one knew anything about it, but he was very gratified to see in the discussion that such eminent authorities as Mr Biggart and Prof. Barr were quite prepared to believe that a ship could stand a great deal of straining up to a stress of ten tons to the square inch, so that perhaps if they could believe that that stress could be resisted by a structure like a ship as well as by bridges, the conditions that they assumed for a wave were not very far from the

actual truth. He thought that the most important point brought out was that the factor of ten tons was, to an ordinary shipbuilder, rather an alarming figure. He was sorry that a great deal more was not given in the paper than really was, but that was a cause of regret in most papers. One must end a paper somewhere, and must leave out some things that would perhaps be desirable to put in. Therefore, he meant to say no more about some of the remarks that were made, regretting that certain things had not been included. Mr Napier had called attention to a point which perhaps required some notice. He had asked what percentage of strength had been taken for the riveting of joints on the top side. The percentage of strength that was taken was seven-eighths of the solid area, and that seven-eighths was taken on the assumption that the weakest part in the shell was along the ordinary beam line, where the rivets were placed about eight diameters apart, and along the ordinary frame line, where they were also placed eight diameters apart, so that seven-eighths would represent the strength left. Mr Napier said that a few butt joints were more than three-fourths, and he thought that might be quite true, because the butts did not exist along one line, but were supported by solid plates which had no butts in them at the part where the butt existed in the adjacent plane. Mr Biggart asked whether the stress would be reversed when the vessel was resting on two waves instead of one. It would be reversed, but not to anything like the same amount and not to the same intensity when the vessel was stretching along the hollow of a wave rather than the crest of a wave—not probably more than a half when it was riding on the crest of a wave. He meant that that was for very large vessels. The actual amount that the stress was when resting in the hollow of a wave in any ship must depend upon the disposition of the weight and the buoyancy of that particular ship. As a matter of fact, he supposed the President knew that some of the lighter vessels, when they were in the hollow of a wave, were very much more stressed than they would be when on the crest of a wave. There was one paragraph in the paper which seems to have irritated some people to some extent. He did not know that it was

quite desirable to take any notice of the irritation, but he would like to read the sentence that had been referred to:—"There is one important question which has not been touched upon in this paper—viz., the maximum strength which should be provided against in a large ship. This can only be decided by experience, and that experience can only, at present, be gained with certainty by building, by accident or intention, ships that are weak." He did not know any other way of obtaining that information with *absolute* certainty than by building ships that are weak, or any other way of building ships that were weak except by accident or intention. He thought the sentence was complete, and it conveyed the opinion that he intended to convey, and he thought that any one who read it carefully would see that it was really not deserving of the criticism that it had brought forth. Again he took the opportunity of thanking them for the kindly reception that they had given to the paper.

The PRESIDENT said they might consider the discussion on Prof. Biles' very valuable paper closed, and the learned Professor deserving of their cordial thanks for the pains he had taken in preparing this paper, which must be useful for reference for many a day to come. He could quite endorse what had been said by some of the gentlemen speaking of the paper as to the labour and care required to prepare these elaborate calculations, having had some personal experience of going through this work—not upon vessels of this scale, but for vessels of peculiar types, where the ordinary scantlings, as laid down in Lloyds' rules, were of no use as guides. He remembered that his first experience of a calculation of this kind was about 1868. It was made with the intention of convincing a body of American shipowners that a superstructure in the form of a hog frame was not a necessary appendage to a river steamer, if the hull were built of iron. A demonstration was prepared, but the owners were proof against conviction, and the vessel was built with the hog frame of iron. It was very discouraging for a young naval architect, but they got accustomed to these rebuffs as they got older. There was one passage in Prof. Biles' paper which he felt

obliged to allude to, not in any controversial manner, but because it was necessary to clear something up. It was in the concluding sentence, or peroration, of the paper. It had doubtless been called forth by some remarks which were made by him at the opening of the session. He was not opposed to improvements in shipbuilding. There were different directions in which improvement might be sought, and they might not always agree which was the proper direction, and he was not certain that to obtain the highest speed, by always increasing the size, power, and cost, was the best way of obtaining the result wished for. Certainly it was not the way that called forth the highest order of ability; it was getting by mere weight of metal what might be obtained in other ways by refinements in design. However, that was a subject to which they might return on some other occasion. He proposed a vote of thanks to Professor Biles for his paper.

On "The Effect of Reversing the Screw Propeller of a Steamship upon the Steering."

By Captain JOHN BAIN.

Received 7th, and Read 21st November, 1893.

THE effect of reversing the screw on the helm when the ship is going full speed ahead has had the attention of similar institutions years ago, and in which members of this Institution took an active part. But the result of the discussions and experiments which followed, I regret to say, do not appear to have reached many of those who were and are more immediately connected with the handling of screw steamers.

At all events, this I can say, that however brilliant these discussions may have been, and however exhaustive the experiments, they never happened to come under my notice, nor did I while afloat ever meet an engineer, officer, or master, who had heard of them, until the night previous to the decision of the court martial, held at Malta, on the sad loss of Her Majesty's ship "Victoria."

I may also state that, on Saturday last, my attention was called to an article which appeared in the *Nautical Magazine* of October, 1887.

Permit me now to state the results of actual experience, obtained in half-a-dozen large sized screw steamers :—

1st.—If the helm is put hard aport on board a screw steamer, with a right-handed propeller, going full speed, or nearly full speed, ahead, and at the same instant the engines are reversed full speed, I hold that her head (provided there are no disturbing influences present) will cant to port instead of to starboard.

2nd.—That if the helm is put, or rather allowed to run hard

astarboard, the instant the engines are reversed full speed ahead her head will cant to starboard as if *on a pivot.*

3rd.—That if a steamer, with a screw such as I have described, going full speed ahead, has another vessel close to on her starboard bow, and that in trying to clear her the helm is put hard astarboard and the engines reversed full speed, a collision is almost certain. It follows, then, that in the event of collision being imminent with a vessel on the port bow, the helm should be put hard astarboard the moment the engines are reversed, and if the vessel or danger to be avoided is on the starboard bow, the helm should be put hard aport the moment the screw is turned astern.

Now, if a collision did occur with a vessel on the starboard bow, and it was proved that the helm had been put hard aport, or on the port bow with the helm hard astarboard, while the engines in both cases were going full speed astern, I feel confident in asserting that so little is the effect of the reversion of the screw on the steering understood at the present time, that there is not a court in Britain would unanimously justify the man who had recourse to such a mode of trying to avoid a collision.

I am equally confident also that if the reversion of the screw on the helm, while a ship is going full speed ahead, were known and acknowledged as it should and will be, there would be fewer sad collisions to deplore.

Now, although I desire to be brief in regard to my own experiences in this matter, I think I would fail in my purpose were such considerations to deter me from stating that, during my first two years as master in steamers, commencing in 1873, I had three serious collisions. Those I attributed solely to the reversion of the screw, while going full speed ahead, *affecting the steering.*

Only one of these, however, happened while the vessel was under my direction. The other two occurred while authorised and experienced pilots were in charge, and what is perhaps not the least

important point in this catalogue of disasters, the collisions referred to were in three different steamers. After such experiences you will, I think, sympathise with me for having made a few notes of my observations on these occasions, and also for endeavouring to investigate the matter more minutely.

By repeated experiments at sea with the ship's head on a star, and at other times while waiting off a port by laying down a barrel, it was found that, with the ship going full speed ahead, to stop and reverse the screw, and let the helm run from hard aport to hard astarboard, resulted in the ship's head swinging to starboard with amazing rapidity; and on the other hand, in similar circumstances, when the helm was kept hard aport, her head canted to port, almost as long as she retained headway.

These facts, deduced from a very large number of experiments, I communicated at the time to the *London Shipmasters' Association Journal*, but, so far as I know, no notice was taken of them.

My next attempt to bring the matter before those concerned in the handling of screw steamers was a letter to the *Glasgow Herald*, in reference to a collision which took place a few years ago, below the Cloch Lighthouse, between the steamers "Europa" and "Roseville," of which the following is an extract:—

"If two steamers going full speed ahead and meeting end on, or nearly end on, the one having the other's red light in view on each other's port bow, and when, say 500 yards apart, both helms are put hard aport, and the engines of both reversed full speed at the same moment, a collision, I maintain, will be the result, as surely as if the one had *ported* and the other *starboarded*."

With regard to the "Victoria" disaster, I am convinced that collision was imminent the moment the starboard screw of the "Camperdown" was reversed full speed, and made fully certain when the port screw of the "Victoria" was turned full speed astern.

Had both these vessels started from their respective divisions at, say under half speed ahead, with the port screw reversed on board the "Victoria," and the starboard screw reversed on board the "Camperdown," while the other screw on each of them was kept at

full speed ahead, I have no doubt but this sad accident would have been averted.

The following notes on the steering and turning experiments in the steamer "Hankow" are taken from the report of the British Association Committee for inquiring into the steering of steam ships.

It is dated 1877, and shows the effect of the reversion of the screw on the steering of that vessel to a remarkable degree.

FIRST EXPERIMENT.

Ship going full speed (say 10 knots). Engines were suddenly reversed, helm put hard aport; immediately the engines started time noted, and bearing of ship's head by Admiralty compass noted, and the bearing of ship's head noted at every 15 seconds until the ship came to dead stop.

Result—Ship came to dead stop in 3 minutes 30 seconds, and turned to port 26° in 2 minutes, and then to starboard 8½° for 1 minute 30 seconds.

SECOND EXPERIMENT.

Ship at full speed ahead (say 10 knots). Engines suddenly reversed to full speed astern, helm put hard astarboard. Bearings of ship's head taken as before.

Result—Ship came to dead stop in 3 minutes 23 seconds. Her head payed off to port 2° during the first 15 seconds, and afterwards turned to starboard 39° degrees before coming to rest.

THIRD EXPERIMENT.

Ship going full speed ahead (say 10 knots). The engines suddenly reversed to full speed astern, the helm put amidships. The bearing of ship's head noted by Admiralty compass as before.

Result—Ship came to absolute rest in 4 minutes 15 seconds. Her head turned to port ½° degree and 27° to starboard before coming to rest.

A collision, which formed the subject of a Board of Trade Inquiry

at Liverpool, happened a couple of years ago in the Irish Channel between the steamer "Thistle" and an unknown schooner. The schooner was suddenly observed on the starboard bow of the steamer close to. Instantly the helm of the steamer was put hard astarboard, and the engines reversed full speed, with the view, it was contended, of shooting ahead of the schooner, she being too close to risk putting the helm aport and pass astern. The result of this manœuvre was that the steamer's head canted to starboard and cut into the schooner abaft the main rigging. The schooner sank, and all hands were drowned.

It is quite evident in this case that if the "Thistle's" starboard helm had taken *any effect*, the accident, although almost inevitable, would not have happened in the way it did. The bows and head-gear of the schooner might have run into the starboard side of the steamer if the latter was under the influence of her starboard helm, but the steamer cutting into the schooner abaft the midships is a mystery, unless we accept the effect of the reversion of the screw upon the steering of the "Thistle."

Neither the master nor the second officer, who were on the bridge at the time, could offer any further explanation of the canting of their vessel to starboard than that the measures they adopted—viz., starboarding the helm—should, in their opinion, have canted her head to port, and not to starboard.

In the case of the "Thorsa," of Leith, and "Otto," of Hull—a collision which took place in the Baltic in September, last year—the same subtle agency is clearly traceable.

The "Otto," it was proved, kept her course, steering nearly end on to the "Thorsa" until within a few seconds of receiving the fatal blow from the stem of the "Thorsa."

The "Thorsa," it was also proved, kept porting her helm for some minutes before the accident, and latterly put her helm hard aport, movements which, I need hardly remind you, must have taken her considerably out of the track of the "Otto," and would, I think, have kept her clear of the "Otto;" but, unfortunately, as soon as the "Otto" was observed to have starboarded, the "Thorsa"

reversed her engines full speed, and smashed into the "Otto's" starboard quarter, and sank her.

A clearer case of the effect of the reversion of the screw upon the steering than the collision between those two steamers is not on record, and is well worth investigation.

I have a number of similar cases which I could cite in support of my contention, but as the "Thistle" and the "unknown schooner" accident is an instance of the effect of reversing with starboard helm, and the "Thorsa" with port, I shall not trouble you further in this respect, and may say in closing that if my observations will only induce the members of this Institution to again consider and revive this *important question, I have no doubt as to the result.*

Letters and Reports bearing on this subject—

The Glasgow News, 21st May, 1877.
The Nautical Magazine, October, 1877.
Report, British Association Committee, 1877.
The Glasgow Herald, August, 1893.

The PRESIDENT asked Captain Bain if the effect of a starboard helm with a right-handed propeller would be greater than the effect of a port helm. He wished to know if Captain Bain, in making his experiments, had taken any notice of that by observing the compass or a point on the shore, so as to give the comparative effect of the helm both ways.

Captain BAIN said, in reply to the President, that a steamer canted very much faster on starboard helm going astern than she did on port helm. In regard to the effect of the reversion of a left-handed propeller on the steering while going ahead full speed, he would not like to express too strong an opinion, as he only conducted experiments in one steamer with a propeller of that description. The experiments he did make with her, however, gave exactly the same results as those with right-handed screws.

The discussion of this paper was resumed on 19th December, 1893.

Mr JAMES MOLLISON said the question which Captain Bain had brought before the Institution on the steering of steamships was of considerable importance to all those who had to do with the safe navigation of steamers. In 1877 experiments were made on the Clyde the results of which corresponded very much with those made by Captain Bain. Those experiments were conducted by the late Mr James Napier, and he thought Sir William Thomson, now Lord Kelvin; and Mr Thomas Davison, who is one of our members, was also present. Professor Osborne Reynolds first called attention to the matter in 1875, two years previously, at the British Association meeting. It was found that in several instances vessels going full speed, when the helm was ported and the engines reversed at the same time, the vessel's head canted to port, or the opposite direction to which it was intended, from 22 to 28 degrees; and under the same conditions, when the helm was put to starboard, the vessel's head went to starboard 40 degrees. He did not know whether these facts were brought before the Board of Trade at the time or not, but if they were, he did not know of any action having been taken with regard to the subject. The rules regarding the starboarding and porting of the helm being rather complicated as it is, this question of the effect of reversing the engines upon the steering of the vessel was, he thought, worthy of the consideration of the Shipowners' and Shipmasters' Associations. Captain Bain seemed to attribute a number of cases of collision which had come before him as a nautical assessor to a want of a proper understanding of this effect, and he (Mr Mollison) thought that some of the members of the Institution who were in a position to do so might make some further experiments, and give publicity to the results, which might be the means of averting many sad disasters.

Mr JAMES RICHMOND said that the Board of Trade rule is that each ship shall direct her course to starboard, and the Board of Trade Examiners will not take the putting the helm to port as an answer to the question as to why that was not done. The rule

says that the ship shall direct her course to starboard, and it is left to the officer to take his own course to do that.

Mr MOLLISON was aware it was not a very hard and fast rule. It was left to the discretion of the officer in charge what to do to avert a collision, but if two vessels were coming end on, or nearly end on, to one another, the officers on their respective bridges would each have a pretty good idea of what the other would do. They would in all likelihood port their helms, irrespective of whether the engines were reversed or not.

Mr W. R. M. THOMSON said it struck him that the paper was a little defective in two points: first, in the author not pointing out clearly the Board of Trade rule for preventing such collisions at sea; and, second, in not giving the better rule he would propose, in contradistinction to the Board of Trade rule; and he considered that if the author would yet add this to his paper, it would be a great desideratum.

Mr MOLLISON said that in addition to the letters and books bearing on the subject, which Captain Bain gave on page 80, there was also the *Marine Engineering News* of 1st June, 1877, and the same paper of 1st September and 1st October, 1877. There was a lot of information given in these papers as to what was done at that time in making experiments with a number of vessels. The Earl of Glasgow and the Duke of Argyll put their yachts at the disposal of the Committee here, and one of the Clyde Trust hopper barges (No. 12) was also commissioned for the carrying out of these experiments. About the same time Sir Donald Currie put the S.S. "Melrose," which was built by Messrs Steel of Greenock, at the disposal of the Committee, who carried out a number of experiments with that vessel also, so that these papers, or extracts from them, might be embodied in the Transactions, and would be valuable to the Institution.

Mr JOHN THOM said none of the speakers had tried to give the Captain a reason for the helm having to be put the reverse way. He mentioned that he was captain of a sailing ship for years before ever he was on a steamer, but if a sailing ship misses stays and

goes astern, the helm has to be reversed the same as in a yacht, so that you have to reverse the helm when going astern, to make the vessel's head turn the same way as when going ahead; this is acknowledged by every one. Equally, when the propeller is reversed, and drawing the water from behind past the helm, the action is the same as if the vessel was going astern, even when it is going ahead. From experiments made on twin screw steamers where the propellers were far enough apart not to interfere with the rudder, when the engines were reversed the vessel answered the helm as long as it had headway, proving that it was the propeller being before the rudder and drawing the water past it, that had the reverse effect on single screw steamers, or perhaps twin screw, if they are closed together before the propeller.

Mr STROMEYER said the point which Mr Thom had just mentioned should be looked into by Captain Bain, because he rather seemed to be under the impression that a twin screw would act the same as a simple screw. His feeling was the same as Mr Thom's, that the cause was the water drawn up on the rudder, and that that would not happen in a twin screw.

The CHAIRMAN said he begged to propose a vote of thanks to Captain Bain for his paper. It was a very interesting subject. Any question that had been put to-night Captain Bain would reply to, and his answer would appear in next issue of the Transactions.

Captain BAIN writes as follows:—

In reply to the remarks made at the discussion upon the above paper on 19th December last, by members of the Institution of Engineers and Shipbuilders, I beg to state as follows:—

Mr Mollison, in supporting my contention in regard to the effect of reversing the screw upon the steering of the ship, suggested that extracts from the reports of experiments referred to by me as appearing in the year 1877 should be embodied in the Transactions of the Institution. With this desirable object in view, I included

Mr James Napier's article, which appeared in the Glasgow *Daily News* of 21st May, 1877, in my paper, and as it practically covers all that was done at that time, I will be glad if the Secretary can find room for it along with these remarks in next issue. (See p. 86.)

Mr John Thom's remarks, it will be seen, are directed more to what Mr Mollison said in reference to the Board of Trade rule in regard to steamships, "That each shall direct" her course to starboard when meeting end on, or nearly end on, and has no direct bearing on the subject of the effect of reversing the screw upon the steering.

Mr W. R. M. Thomson says my paper was defective on two points—(1) because I did not point out the Board of Trade rule, and (2) that I did not propose a remedy for the said rule, or what I would advise as a rule in contradistinction to that of the Board of Trade. My answer to Mr Thomson's first complaint is that there is no Board of Trade rule in regard to the effect of reversing the engine upon the steering; and as to the second objection, I would refer Mr Thomson to paragraph 3, page 76, of the Transactions (21st November last), which reads thus:—"It follows, then, that in the event of collision being imminent with a vessel on the port bow, the helm should be put hard astarboard the moment the engines are reversed, and if the vessel or danger to be avoided is on the starboard bow, the helm should be put hard aport the moment the screw is turned astern."

I am obliged to Mr John Thom for calling the speakers to account for not having given a reason why the helm has under certain circumstances to be put the reverse way, and trust that not only those who kindly manifested sufficient interest to speak on the subject, but that those who did not, will, after satisfying themselves that reversing the screw does affect the steering, express their opinion as to the cause. Fearing that any attempt on my part to define the reason why the helm acts in the opposite way after the engines are reversed while the vessel is still rushing ahead nearly full speed might be injurious to my statement of personal experiences in regard to the results, I carefully left that question for the

consideration of members more competent to deal with cause and effect. Mr Thom of course only uses the well-known illustration of having to release the helm of a small boat going astern to get the rudder to go the other way, to make plain his arguments as to the action of the water upon the rudder. On this matter, as I have said, I prefer offering no opinion at present. But when Mr Thom says that from experiments made with twin screw steamers the action of the water upon the rudder is opposite to what it would be in a single screw steamer, I feel constrained to say that while both steamers are turning ahead full speed, the water must necessarily be thrown from each screw towards the rudder, whereas in a single screw it is only thrown from one side. In neither case, however, does the water from the screw or screws affect the steering to any appreciable extent. A single right-handed screw steamer when going full speed ahead (strange to say) carries from 3° to 5° starboard helm, while a twin screw (I am told) requires as much helm one way as another to keep her on her course. If this be so, it is evident that the drawing of the water by the screw from ahead has little or nothing to do with the steering. The course of the ship is regulated by the helm, and not by the screw. I should like Mr Thom and Mr Stromeyer to consider the following questions :—Are the circumstances not entirely changed when one of the twin screws is reversed and the other kept going full speed ahead? Further, if the starboard screw of a twin is reversed, will it not have the same effect as if a single right-handed screw was reversed, and *vice versa* with the port screw of a twin and a left-handed single screw?

If Mr Thom and Mr Stromeyer are still of opinion that the effect of the action of twin screws upon the steering is opposite to what it would be in a single screw steamer when reversing full speed, all I can say is that nothing would afford me greater pleasure than that one, or both, intimate their intention of demonstrating their views on the subject at an early date.

I have to thank the President and members for the attentive hearing I have received, and also for the kindly vote of thanks tendered.

Letter referred to at page 84.

Since the meeting of the British Association held at Bristol in 1875, a considerable amount of attention has been given to the subject of the steering of screw steamers. On that occasion a paper was read in the Mechanical Section of the Association by Professor Osborne Reynolds, who showed from experiments upon models that in a screw steamer when the screw is in motion the direction in which the rudder tends to turn the ship depends upon whether the screw is driving ahead or astern, and is independent of the actual motion of the ship through the water. For example, if when a ship has headway on the screw is reversed, then the action of the rudder will be the same in direction as that of a ship going astern, or if the ship has stern way on, and the screw be started to drive her ahead, then the rudder will act as if she was going ahead. In the discussion which followed the reading of the paper much curious information was brought out regarding the actual experience of persons who had given attention to the subject when on board screw steamers. Such a variety of opinion was shown that it was deemed most desirable that a series of actual experiments should be made on steamers when opportunity offered, in order that an abundance of facts might be obtained for the purpose of laying down such rules as would prove serviceable in cases of possible collision at sea, running on rocks, etc.

Mr James R. Napier, Sir William Thomson, Mr William Froude (one of the scientific advisers of the Admiralty), and Professor Osborne Reynolds, were appointed as a committee to carry out the investigation further, and particularly to ascertain if the same results were obtained when the experiments were made with full sized ships. Application was made to the Admiralty and to private shipowners to aid them in carrying out the necessary experiments.

As many as six different kinds of trials were requested, and the committee were officially informed that the Lords of the Admiralty

had ordered the experiments to be made, but we are not aware that, if instituted, any report had been made regarding them. In the course of last summer, however, the use of certain steamers was obtained for the performance of the desired experiments on the Clyde—viz., the Earl of Glasgow's steam yacht "Valetta," the Duke of Argyle's steam yacht "Columba," and No. 12 steam hopper barge, belonging to the Clyde Navigation Trust; and the information obtained, which was embodied in a report submitted to the Mechanical Section of the British Association at the Glasgow meeting last September, was deemed to be of the very utmost importance to all shipowning communities. Recently another series of experiments was made, the vessel used being Messrs Donald Currie & Co.'s new mail steamer "Melrose," while off Toward Point proceeding down the Frith on her trial trip to the North-West Highlands.

They were under the superintendence of Mr James R. Napier, F.R.S., convener of the British Association Committee, and Sir Donald Currie, as a large shipowner, manifested the liveliest interest in them, and allowed the vessel to be detained for the purpose.

In the first experiment, the steamer was going at the rate of about 10 knots an hour—that is to say, about full speed ahead—and the order was given to reverse the engines full speed astern. As soon as the engines commenced to move full speed astern the helm was put hard aport.

The result was that the ship's head canted 28 degrees to port before the headway could be stopped. When the headway was completely overcome her head remained stationary.

Again, when the vessel was going at the same speed, the order was given to reverse the engines full speed astern, and as soon as the engines began to move in the reverse direction the helm was put hard astarboard. The ship's head canted 40 degrees to starboard before her headway was overcome, and when that result was accomplished her head remained stationary.

In the third experiment the steamer was going at the same speed as before. The order was then given to reverse the engines from

full spead ahead to full speed astern, and simultaneously to put the helm hard aport.

The engines then commenced to move full speed astern the same moment as the helm was put hard aport, and the ship's head canted 22 degrees to port before her way was stopped.

These three trials were all made within a few minutes of each other, and under precisely the same conditions.

The weather was very calm, and there was neither current nor tide.

These go to show the existence of very erroneous impressions in the minds of the captains of screw steamers, the general notion being that in all cases when the vessel is going ahead she will obey the rudder in the usual way.

Furthermore, they prove that Professor Reynolds was correct in the theory which he stated at the Bristol and Glasgow meetings of the British Association—namely, that screw steamers, when suddenly reversed, take a course contrary to the direction which the rudder would give in ordinary cases.

This peculiarity of such steamers is rarely observed in the ordinary handling which they receive from their captains and other officers, simply from the fact that the sudden stoppage of the motion of the vessel is seldom required, except in cases of threatened or actual collision, or similar casualties.

The peculiarity in question sometimes comes into action at a most critical moment—viz., when there is anticipated danger of collision. The trials made with the "Melrose" were virtually examples of mock collisions at sea, and the extraordinary results obtained very fully demonstrated that such experiments should be made on every vessel, so that her captain may know how he would behave in a case of threatened collision.

The cause of the difference between the result in the case of screw and of paddle steam ships arises from the fact that the screw, when moving in the ordinary direction, draws water from the bows to act on the rudder, and when moving in the reverse direction the screw draws water from the stern and throws it against the back of the

rudder, and operates in precisely the reverse direction from what is desired. The reason paddles do not operate in a like manner is because of their distance from the rudder.

In the experiments spoken of above, the engines were reversed in 15 seconds after the order to reverse was given by the telegraph from the bridge, and the vessel was stopped in $2\frac{1}{2}$ minutes from the time of the order being given.

On "Rotatory and Re-action Engines."

By Mr ALEXANDER MORTON.

(SEE PLATES IV., V., VI., AND VII.)

Received and Read 19th December, 1898.

THIS paper is devoted chiefly to a description of some improvements recently made on the oldest engine we have any account of in history—viz., the revolving eolipile of the ancients, described by Hero, of Alexandria, in the second century, B.C. Fig. 1, Plate IV., represents the engine, as shown and described in "Ewbank's Hydraulics," and it consists of a closed boiler, A, standing upon three feet above an open fire, on the top of which are two standards, C C, one of which is hollow and forms a communication with the steam space of the boiler, A. The upper ends of these standards, C C, are tapered and bent towards each other, so as to suspend a small hollow brass sphere, B, with two projecting arms diametrically opposite each other. These arms are hollow, and bent at their outer ends, so as to direct the steam, issuing therefrom, in a tangential direction. The escape of steam from the bent ends of these hollow arms, or tubes, imparts a revolving motion to the sphere, B, by reaction in a contrary direction to that of the issuing steam; the ends of the standards, C C, forming the centres, or journals, round which the sphere, B, revolves; this constitutes the earliest, and simplest, revolving engine known to be driven by the force of steam. The improvements, to be described further on, have this engine as a basis, and are not improvements on that class of engines generally known as "rotatory engines," wherein a bored cylinder contains a revolving

piston, with sliding, oscillating, or revolving abutments, one modification of which is indicated by Fig. 2, Plate IV., where the driving shaft, D, is shown concentric with the cylinder, A, and eccentric with the drum piston, B, keyed thereon. The sliding abutment, C, is generally worked by a cam eccentric, keyed on the driving shaft outside of the cylinder, A, and is worked out and in as the eccentric piston, B, revolves. Steam is admitted by a port on one side, and exhausted by another port on the other side of the abutment, C, and the action is so well understood, that the diagram drawing (Fig. 2, Plate IV.) has been thought sufficient for the purpose of this paper. Fig. 3, Plate IV., represents another modification with the driving shaft, D, also concentric with the cylinder, A, within which is fitted a flat, radial piston, B, keyed upon the driving shaft, D, the abutment, C, being, in this case, an internal revolving drum, running on large journals eccentric to the cylinder, A.

The periphery, or rim of the revolving drum abutment, C, is cut rather wider than the thickness of the piston, B, so that, at any angle, it may work freely therein. The steam is admitted by a port on one side of the abutment, C, and exhausted at the other side, similarly to that just described for the previous modification. There is one dead point in each revolution of both modifications (Figs. 2 and 3, Plate IV.), and the steam is shut off by means of a valve on the inlet steam pipe whilst the piston, B, is passing from the exhaust to the steam port, which valve is worked by a cam on the driving shaft, D. These two modifications (Figs. 2 and 3, Plate IV.) include all the intermediate abutments, such as those hinged like a door, instead of sliding, as in Fig. 2, and others revolving, partly outside and partly inside of the casing, A, instead of revolving wholly inside, as in Fig. 3. Another modification is indicated by Fig. 4, Plate IV., where in this case the driving shaft, D, is eccentric with the cylinder, A, instead of being concentric, as in Figs. 2 and 3, Plate IV.; and the revolving drum abutment, C, is keyed upon, and concentric with the driving shaft, D.

This drum abutment, C, is cut through the rim in four equal parts, leaving a parallel space between each part so that the pistons,

B, B^1, B^2, B^3, may slide freely therein. The steam in this engine may be admitted at two ports on one side, and exhausted by two ports on the other side of the revolving abutment, C, but it has been thought advisable to admit the steam at one port only, and allow the steam to expand as the area of the pistons increase, as has been practised by makers of engines of this construction. These modifications (Figs. 2, 3, and 4, Plate IV.) are all very old ideas, and engines, in accordance with each, have been well made by many eminent engineering firms, but they have never been able to compete with an ordinary reciprocating engine. In the older engines, such as Fig. 4, Plate IV., the cylinders were bored slightly oval, so that the diameter across the centre of the driving shaft was at every point equal.

With reference to Fig. 2, Plate IV., imagine the difficulty in making a steam tight piston to fit a square cylinder of the reciprocating class, instead of a circular bored cylinder as at present made; and this difficulty is here with the revolving piston, B (Fig. 2, Plate IV.). Again, the sliding abutment, C, has to be similarly fitted steam tight on its sides, corners, and that end working on the revolving piston, B, thus making, as it were, two working pistons in one cylinder, and as the steam pressure on the abutment, C, is, in the position shown, always equal in amount to the effective pressure on the piston, B, it has to work up and down continually under the full heat of the steam and this enormous pressure. Imagine an ordinary engine running with a pressure on the guide bars equal to that on the piston, and where oil could be easily applied, and you may form some idea of the power lost by friction in working the sliding abutment, C (Fig. 2, Plate IV.), where the heat is great and oil difficult to apply. At the junction of the abutment, C, and the revolving piston, B, the two circles, or arcs, are of necessity of greatly different curves, consequently they can only touch each other on a knife edge line across the periphery of the drum piston, B; and those who have had experience in scraping valves, so as to be steam tight under varying temperatures, with a reasonable amount of bearing surface, will form some idea of the pressure

necessary to keep a knife edge bearing steam tight along that line of ever changing contact, and the amount of steam that would blow through if such pressure were not maintained. These remarks apply equally to all the three modifications (Figs. 2, 3, and 4, Plate IV.) here shown; and although Fig. 3 shows a revolving abutment, C, it may present three or more times the area of the sliding abutment, C (Fig. 2), to the action of the steam pressure, and must revolve under that pressure on necessarily very large journals, and it has knife edge bearing surfaces in the rim, and, altogether, does not differ from that shown on Fig. 2. In Fig. 4, Plate IV., the sliding pistons, B, B^1, B^2, and B^3, have to slide through the rim of the revolving drum abutment, C, whilst under the full pressure of the steam upon them, consequently, do not differ from the sliding abutment, C (Fig. 2); they have each knife edge bearing surfaces at the contact points across the interior of the cylinder, A, and therefore the actions in one modification are similar to those of the others.

Some large engines were made by an eminent marine engineering firm on the Clyde about half a century ago, and fitted by them on board of some paddle steamships; these were on the principle indicated by Fig. 4, Plate IV., and in accordance with a patent granted to Mr Peter Borrie, of the original Tay Foundry, Dundee. Strange to say, each of these steam vessels, one after another, was lost, and the making of "rotatory engines," by that firm, abandoned.

The great attraction these engines have had, and still have, for inventors, has induced the author to make these remarks in this paper, and he trusts these will not be taken amiss by those still persevering in the hope of success; and in concluding this part of his paper, he thinks it proper to mention that there is one difficulty inherent in all engines of the revolving piston class that no workmanship has, as yet, been able to overcome—viz., no two points, at different distances from the centre of a revolving piston, travel at the same rate; consequently, those further from the centre, at a greater speed, wear faster than those nearer the centre, at a slower speed, and a great pass of steam is shortly the result; whereas, in a

reciprocating piston engine every point of the piston travels at the same speed at the same instant; hence the practicability of it remaining steam tight for a considerable period of time.

The flow of fluids, flowing from a higher pressure into a lower pressure, through nozzles of different forms, by experiment, has been a hobby of the author for many years; some of which have been described by him in a paper read before the Philosophical Society of this city, many of which were afterwards confirmed by the late Mr James Brownlie, and described in a paper of his to this Institution.

From these experiments, and those of the late Mr Robert D. Napier, the author was led to consider whether the percentage of work obtained from the energy, or heat of steam, could not be utilised otherwise than by a cylinder and piston, and the frequent breakdowns of high speed reciprocating engines led him to experiment on the engine of the ancients. His first experiments were made to ascertain what form of nozzle gave the greatest re-action from a state of rest, and for this purpose a single compartment casing, enclosing a single outward flow wheel, was used, and the weight of steam was measured by passing it through one of his own "ejector condensers," which discharged a constant quantity of water in all the experiments, and he found that those nozzles which gave the greatest re-action from a state of rest, also gave the greatest duty when doing work, which was measured by a water gauge in the discharge aperture of a fan. The steam at this time was supplied by the shop boiler, at about 45 lbs. per square inch above the atmosphere, which the insurance company afterwards increased to 60 lbs., when an inward flow wheel was added, with double the number of nozzles, and consequently double the combined area of those in the outward flow wheel. With these two wheels mounted on the same shaft, and enclosed in the single compartment casing, nearly double the duty was the result. Seeing that the increase in steam pressure, and the addition of a wheel, so increased the duty of the engine, a simple cylindrical boiler was made with dished ends, and two longitudinal stays between them; diameter of boiler, 3 feet

6 inches; length, 12 feet; tested to 320 lbs. per square inch above atmosphere, and loaded by the insurance company to 160 lbs. above atmosphere. This boiler was built in in the engineering works of Messrs Campbell, Smart & Co., Old Dumbarton Road, where it has done duty ever since. In the interval, another casing and another duplex wheel were made; the two casings were bolted together, with an annular opening between them around the shaft, so as to admit the steam from the first inward flow wheel into the second outward flow wheel; there were thus an outward and an inward flow wheel in each casing, making four stages of expansion, the area of the nozzles being increased proportionally. With the two duplex wheels mounted on the same shaft, balanced, and enclosed in the two casings, with 80 lbs. per square inch above atmosphere initial steam pressure, and 22 inches vacuum, this engine gave a far greater efficiency than any previous experiment.

The new engine, now driving the Schielé fan in the above works, is the outcome of these previous experiments: it has six stages of expansion, and its construction is represented by the drawing (Figs. 5 and 6, Plate V.).

Fig. 5 is an end section, showing on the left of the central vertical line one-half of the first or outward flow side of the first duplex wheel, and on the right one-half of the second or inward flow side of the first duplex wheel, mounted on a central shaft, D, and enclosed in a circular casing, A. Fig. 6 represents a half longitudinal section and half elevation of the casing, A, surrounding three duplex wheels. The first wheel, B, is shown one-half in section, and the other half in elevation.

The casing, A, is formed in two similar parts, bolted together lengthwise, each part having a partition, C, cast so far from the end, that when the two parts are bolted together, and the end covers bolted thereto, the whole forms three separate compartments, and in each compartment there is a duplex wheel, each composed of three circular steel plates—the centre plate, N, is flat, and the two outside plates, O, O^1, dished. Between the centre plate and each outside plate there is a brass ring of the same diameter, to keep them at

their respective distances apart, and so as to bind the three steel plates and the two brass rings together, to form a whole hollow duplex wheel, the nave, M, being riveted on to the central plate. The nozzles are formed through each brass ring; those on the first, or high pressure side of the wheel, B, are outward flow nozzles, and those on the opposite side are inward flow nozzles, the latter being rather larger in area than the former. The wheel, B, in the first compartment of the casing, A, receives high pressure steam from the boiler through an annular opening around the shaft, D, formed by the larger hole in the centre of the first dished outer steel plate, O; thus admitting steam into the wheel on one side of the centre plate, it then flows outwards towards the periphery, and through the curved nozzles of the first brass ring, so as to deliver the steam at a tangent to the periphery, into the first compartment of the casing, A, at a lower pressure, and it returns from the casing, A, through the inward flow nozzles of the second brass ring, on the other side of the said centre plate, and is delivered at a tangent to the inner diameter of the circle, and flows inwards towards the centre of the wheel; there is, therefore, an outward and an inward flow action combined in one duplex wheel. The steam leaves the inward flow side of the first wheel by an annular opening through the centre of the first partition, C, of the casing, A, and enters the second wheel by an annular opening formed by the hole in the centre of the first dished outside plate of that wheel, exactly similar to that of the first wheel, B, and flows outwards towards the periphery, into the second compartment of the casing, A, and returns therefrom exactly similar to that described for the first wheel; it then passes through the second partition into the third wheel, and finally passes from the casing, A, through the end cover annular passage to the condenser; there has, therefore, been six stages of expansion, and at each stage, the nozzle area has been greater than that of the previous stage. The nozzles through the first brass ring are each $\frac{1}{32}$-inch by $\frac{1}{2}$-inch, increasing proportionally at each stage, until at the last of the series the nozzles are nearly $\frac{3}{16}$-inch by 1 inch. The circulation of the steam in a contrary direction to that in which the

wheels may be revolving, is prevented by a series of curved projections, E, cast or fixed on the inside of the casing, A, and a similar series are cast or fixed on enclosed central discs, H, one in each wheel, supported by its own trunnion, or tube fixed at the apertures through each of the two partitions, C, and the low pressure end cover, I, of the casing, A. Those projections, E, in the casing, A, arrest the steam issuing from the outward flow nozzles, and those, F, on the fixed disc, H, arrest the steam issuing from the inward flow nozzles, as indicated by the arrows on the drawing (Figs. 5 and 6, Plate V.).

The end pressure of the steam is balanced by means of a larger packing ring, J, in the high pressure end cover, K, of the casing, A, which encloses an area communicating with the low pressure steam of the second wheel by tube stays, L, screwed and riveted between the first dished and centre plates—an arrangement often practised for relieving the pressure on the back of slide valves.

On endeavouring to test this engine with a friction brake, it was found to be quite impracticable at such a high speed, and a Schielé fan was substituted, and directly connected with the engine shaft. The makers of the fan, on inquiry, write in answer:—"When running at 1000 revolutions per minute, and getting 4½ inches, W. G. will require 20 I.H.P. to drive it."

The engine and fan were often driven at a higher speed, but, to get a more correct result, a dynamo was got from Woodside Electric Works, Glasgow, and coupled direct with the engine shaft. Experimenting with this dynamo, under varying electric loads, as a brake on the engine, and taking the readings from the volt and ampere meters as a measure of the electrical or brake horse power of the work developed by the engine, it was found that when the engine was using the same weight of steam as when driving the fan, the engine developed 16 E.H.P., or brake horse power, and it was noticed that at the higher velocities the engine became more efficient. The late Dr Kirk and other engineers of ability saw these experiments performed in 1891, and advised the making of another engine and dynamo combined, so constructed as to run at three or

four times the velocity. This engine, and dynamos to suit, were made in the following year, and the drawings, Figs. 7 and 8, Plate VI., represent it. Fig. 7 is an end section, full size, showing on the left of the vertical central line one-half of the first or outward flow wheel, and on the right of the same line one-half of the inward flow wheel.

The casing, A, of this engine has only one simple compartment, Fig. 8, the casing being one casting, with two end covers bolted thereto, enclosing two distinct and separate wheels. The first wheel, B, has three rings, 1, 2, and 3, of outward flow nozzles of different diameters. The first, or smallest ring, is $9\frac{1}{2}$ inches, the second $12\frac{1}{4}$ inches, and the third 15 inches diameter, thus forming annular spaces between the rings. The second wheel, B, has two rings of inward flow nozzles, 4 and 5. The larger ring is 15 inches, and the second, or inner, $12\frac{1}{4}$ inches diameter, thus forming an annular space between the two rings, into which spaces the curved projections, F and F^1, are fitted. Both wheels are mounted on the same shaft, D, and enclosed in a single compartment casing, A. The higher pressure steam enters the first wheel, B, by an annular opening around the shaft, D, as shown by the arrows (Fig. 8, Plate VI.), and travels outwards through the first ring of nozzles into the first annular space between the first and second rings, and flows out through the nozzles of the second ring into the second annular space, and from thence outwards through the third ring of nozzles into the casing, A, which is common to both wheels.

The steam returns from the casing, A, flowing inwards, first through the larger ring of nozzles, 4, into the annular space between the rings, and in through the second ring of nozzles, 5, towards the centre of the inward flow wheel, B^1, thence through the exhaust annular opening around the shaft, and by the branch to the condenser.

At each ring of nozzles the combined area of these openings increase as the steam becomes reduced in pressure. The first ring of the series has eight, $\frac{1}{32}$-inch by $\frac{1}{2}$-inch, and the last ring ten curved nozzles, $\frac{1}{8}$-inch by 1-inch, and there are only five stages of

expansion in this engine. The steam issuing from the curved nozzles in a tangential direction tends to circulate in a contrary direction to that in which the wheels may be revolving, to prevent which a series of curved projections, E, are cast or fixed on the interior of the casing, A, for the outward flow current, and another series, F, are cast on or fixed to centrally fixed discs, H, in the interior of both the outward and inward flow wheels, so as to arrest the outward and inward flow currents. These projections are more clearly shown by the enlarged sections, Figs. 9 and 10, Plate VI. Fig. 9 is an enlarged section of a segment of the casing, A (shown in Fig. 5, Plate V.), enclosing a segment of the outward flow side of the duplex wheel, B. The curved projections, E, are shown cast on the interior of the casing, A, to prevent circulation therein, and Fig. 10 is a similar segment of the casing, A, enclosing and showing in section a segment of the inward flow side of the wheel, B. The curved projections, F, in the interior of the inward flow side are cast or fixed on a central stationary disc, H, supported by its central trunnion passing out through the wheel, and fixed in the partitions as shown on the drawing, Figs. 5 and 6, Plate V.

To describe the numerous experiments, with different forms of nozzles, before the form shown on the drawings was adopted, would require a paper on that subject alone; but the two experimental apparatus shown by Figs. 11 and 12, Plate VI., are so important to this paper that they cannot well be left out. Fig. 11 is a full size section of an apparatus constructed with a central cylindrical tube, $\frac{3}{16}$ths of an inch wide at the narrowest part, or throat, tapering to $\frac{5}{8}$ths of an inch at the mouth. The tube is 10 inches long, and has three small branches, 1, 2, and 3, communicating, by very small holes, with the interior of the tapered tube. To these branches, 1, 2, and 3, three bent glass tubes are coupled by short pieces of india-rubber tube, and these glass tubes reach down to near the bottom of a dish of mercury, C.

The apparatus is bolted on to a branch steam pipe, A, with the throat end next the supply steam branch, all as shown by Fig. 11, Plate VI., ready for experiment. On opening the stop valve so as

to admit steam to the supply branch, A, it flows through the throat of the apparatus, and is freely delivered into the atmosphere at the mouth or wider end, and the effect is shown by the mercury rising in the glass tubes connected with the branches 1, 2, and 3. The mercury in No. 1 rises highest, that in No. 2 next, and that in No. 3 scarcely any, showing that a partial vacuum is maintained throughout the whole length of the tapered discharge tube. In case the naked tube should in any way affect the experiment, it was enclosed within a parallel brass tube and soldered, so as to leave a free space all round. Steam was admitted into this annular space by the branch, B, so that the central tapered tube was encased with steam of a higher temperature than that passing through it; but, on again performing the experiment, practically the same result was obtained—viz., a partial vacuum throughout the whole interior of the tapered tube, the vacuum being greatest near the throat.

Another experimental apparatus (Fig. 12, Plate VI.) was made in form of a bent tube, tapering from $\frac{1}{16}$-inch by $\frac{3}{4}$-inch at the throat to $\frac{7}{16}$-inch by $\frac{3}{4}$-inch at the mouth, encased in a larger tube and soldered steam tight. The branches, 1, 2, and 3, communicate with the mercury dish, C, as in the previously described experiment, and those branches, 4 and 5, with pressure gauges. The acting steam is admitted by the branch, A, and the encased steam by the branch, B.

On performing the experiment it was found that a partial vacuum was maintained all along the lower, or convex side, and a partial pressure all along the upper, or concave side, of the encased bent tube; there is, therefore, a partial pressure on the concave side and a partial vacuum on the convex side of a tapering bent tube at the same instant of time when high pressure steam passes freely through it into the atmosphere, and this is the form of nozzle which has been adopted, and shown more clearly on the enlarged scale drawing, Figs. 9 and 10, Plate VI.

It would seem from those experiments that steam issuing freely from an orifice, without admixture of air or other vapour by induction, expands very little, if any, latterly when free to expand on

end, thus behaving very similar to that of liquids—such as water under the same circumstances.

In concluding this paper, a few remarks as to the efficiency and uses of this re-action engine would be useful; for instance, the engine (Figs. 5 and 6, Plate V.) has three duplex wheels, and when all the three are in place, 16 electrical, or brake, horse power, as already said, was developed for a given amount of steam; when the low pressure wheel was removed, and the high pressure and intermediate wheels in place, steam at the same pressure and of the same weight gave 12 brake horse power, and when the intermediate wheel was removed, and with the high pressure wheel alone in place, the duty was reduced to 7 brake horse power. During these experiments the condensing water was supplied from a constant head, and passed through one of the author's own "ejector condensers," with an entering conoidal nozzle, $\frac{1}{2}$-inch bore, so that under the same vacuum the quantity was constant; consequently, if the discharge water temperature was alike in each case, the weight of steam which passed through the engine should be practically the same in each experiment. Again, the other engine, coupled direct with the dynamo (Figs. 7 and 8, Plate VI.), has only two compound wheels, and when both were in place, with a given weight of steam, this engine developed 11·0 electric, or brake, horse power; and when the low pressure wheel was removed, and the high pressure wheel alone in place, the duty, with the same weight of steam, fell off to 6·5 B.H.P.; and with the high pressure wheel removed, and the low pressure wheel replaced, 4·5 B.H.P. was given, thus agreeing with the experiment when both wheels were in place, 6·5 + 4·5 = 11·0 B.H.P.

Those two engines have been in operation very frequently since the month of March last, and for two months of that time were under steam every day to show them to visitors in operation; and although one of them runs at about 4000 revolutions per minute, the ordinary oil cups and wicks were found to be perfectly sufficient for lubrication, with no bother whatever in heating.

In March last, two of the members of this Institution—viz., Dr

Archibald Barr, of the University, and Mr Henry A. Mavor, of the firm of Messrs Mavor & Coulson, electrical engineers—made a joint series of experiments on the engine represented by Figs. 7 and 8, Plate VI., and from their report, the duty—with 78 lbs. per square inch, above atmosphere, initial steam; 20 inches vacuum; the engine developing 10·16 B.H.P.—required 87 lbs. of steam per B.H.P. per hour, with feed water at the low temperature of 40·3° Fah., or say about 8·7 lbs. of coal per B.H.P. per hour, not indicated horse power, but actually developed.

This consumpt, although high, does not compare unfavourably with some ordinary cylinder and piston high speed engines of so small a size as 10 horse power; and when we consider that this engine, in its present state of efficiency, is only in its infancy, we are warranted in thinking that with further experiments greatly improved results will follow. It is not so many years since the single cylinder, slow-going marine engines, in many cases, required an equal amount of steam. The new re-action engine has many properties not to be got with an ordinary engine; for instance, this engine, although running at about 4000 revolutions per minute, lies on a temporary wooden table without any binding bolts, and the high speed at which they run enables us to get the same work out of smaller machines they drive, dispensing entirely with counter shafts or belts; there are no reciprocating or unbalanced parts to cause vibration, and the bearing surfaces may be reduced to the shaft journals alone; unlike the rotatory engines previously referred to, there may be few, if any, steam bearing surfaces to wear and pass steam, and an engine of double or treble the power of the present engine would cost but little more to manufacture, as, instead of 8 nozzles, 16 or 24 may be put in the same space and weight, using two or three times the weight of steam in proportion to the increase of power. We are nearing our limit as to high pressure steam in reciprocating engines, in consequence of the tearing of valves and cylinders under the higher heat and pressure; but the re-action engine has neither, and might fairly start where the ordinary engine leaves off, as the joints at the inlet and outlet

passages are so small that they may be scraped nearly steam tight faces, never in actual contact. From the experiments described in this paper, it appears probable that a re-action engine, with more wheels in the series, and a greater number of stages in expanding, with less difference between each, from an originally higher steam pressure, a greatly improved efficiency would be the result.

The engine has none of the faults common to the revolving piston, or rotatory class; it requires but little foundation, and has little or no vibration compared with the ordinary reciprocating piston class; and the increasing demand for higher speeds and lighter machinery points to this long neglected engine shortly taking its place amongst the prime movers of the future, as an economical and reliable motor.

The discussion on this paper took place on 23rd January, 1894.

Professor JAMIESON said that he would draw their attention, in the first place, to the three different senses in which Mr Morton had used the word "duty" on pages 96 and 97. This term was fortunately fast disappearing from the engineer's vocabulary; but when it was used, it should be only applied in one sense. Mr Morton also confounded electrical horse power with brake horse power, whereas there might be a very considerable difference in their numerical values. He must confess that he would like to have seen some reference in this paper to Brown's rotary piston engine, of which he had recently given them a description, more especially as Mr Morton had particularised several forms of such engines. The joint series of experiments referred to at the top of p. 103 is given in the barest of bare statements, contained in four or five lines. They found that Mr Morton's *condensing* engine required 87 lbs. of steam per B.H.P. per hour, whereas he proved that Brown's *non-condensing* engine *only* consumed 37·9 lbs. per B.H.P. per hour.* When in America last autumn he had seen a most interesting little 5 H.P. engine at the Chicago "World's Fair," termed "De Laval's Steam Turbine," which he was assured was then going at the extraordinary speed of

* See "Transactions of the Institution of Engineers and Shipbuilders in Scotland," vol. xxxv., 1891-92, p. 44.

22,000 revolutions per minute. Figs. 4 to 8, Plate VII., would serve to explain this simple engine, which is evidently of the "impact class."* From Fig. 4 it will be seen that the whole combination of steam turbine (S.T.), gearing chamber (G.C.), and dynamo (D) form a very compact arrangement. Figs. 5 and 7 show one of the many small steam nozzles (N) which are fixed round the outer edge of one side of the turbine wheel. The steam expands in passing through the conical noses of these nozzles to the pressure of its surroundings. It therefore strikes the blades of the turbine wheel at an angle and at a *very* high velocity.† The great difficulties at first experienced from the adoption of such high speeds as are attained with this turbine wheel have been overcome by providing it with a flexible shaft (F.S.), which so automatically adjusts itself that the portion of the wheel and shaft between the two outside bearings revolves around the true axial centre of gravity. By the introduction of gear pinions (G.P.) and gear wheels (G.W.) (see Figs. 5 and 8) the speed of the turbine is reduced to that most suitable for the dynamo armature. I am not able to give you the results of any tests of this small 5 H.P. turbine, but I have what appears to be perfectly reliable data concerning an 8 hours' continuous test of a 50 H.P. one of the same type, made on the 13th May, 1893, by Professor Cederblom and Mr Erik Andersson, of the Polytechnical College, Stockholm, and Mr Gust Uhr, of the Swedish Board of Trade. This engine gave 63·7 B.H.P. when run at 1645 revolutions per minute, and only used 19·7 lbs. of steam per B.H.P. per hour with a consumption of barely 2¾ lbs. of Yorkshire coal per B.H.P. per hour in the boiler furnace. This result is a remarkable one, and should be most encouraging to Mr Morton, whose engine would appear to be designed on more scientific and economical principles, if he could only but ascertain the best pro-

* See the second page of the author's paper on Brown's engine already referred to, also *The Engineer*, October 21st, 1893, for a more complete description of "De Laval's Steam Turbine."

† Steam of 75 lbs. by gauge thus expanded to atmospheric pressure is said to issue from the nozzles (N) with a velocity of 2625 feet per second.

portions and speed. With such rotary engines as Morton's, Parson's, De Laval's, etc., it did not matter much whether the steam was wet or dry so long as the pressure was maintained constantly. They were also saved a number of the other troubles connected with reciprocating engines, and, consequently, we may all reasonably hope to live long enough to witness their adoption where such high speeds as they attained could be advantageously applied.

Mr STROMEYER asked the diameter of the turbine.

Professor JAMIESON said that he did not know the diameter of a 50 H.P. one, but the outside diameter of the turbine casing of the 5 H.P. one which he saw at Chicago would only be about one foot. That was the one designed for 22,000 revolutions per minute.*

Mr MACWHIRTER said that Mr Morton might let them know what sort of boiler he used. He (Mr Morton) said that they required 87 lbs. steam per brake horse power per hour. That was something like 10 lbs. of water evaporated per lb. of coal. They did not find that the practice in Glasgow, and it would be interesting to know what kind of boiler he used.

Mr GEORGE RUSSELL said there was no mistake that this was a very peculiar engine, and that it was a sort of engine that at first sight seemed unlikely, if they looked at it from an economical point of view, but Mr Morton seemed to be encouraged to go on. He had heard about Parson's engine, and he turned up the back numbers of "Engineering" and found papers on 4th November, 1892, and 28th July, 1893, by Professors Ewing and Kennedy respectively, who gave it a very high character. It seemed to be

---

* Professor Jamieson wrote to the Secretary that since the discussion of Mr Morton's paper both he and his senior day students had seen two of Mr Morton's engines at work. The smaller one was coupled direct to a dynamo, and when driven at 8600 revolutions per minute a number of incandescent lamps were lighted requiring 110 volts. The larger one was attached direct to a fan, the casing of which is 6 feet diameter, and tips of blades 3 feet 6 inches diameter, and when running at 1000 revolutions per minute the fan delivered the air through a 12½ inch branch at a water pressure of 4 inches. Both engines worked with great steadiness and with very little vibration and noise.

worked on the same lines as Mr Morton's, except that in Mr Morton's the steam began at the centre and returned, whereas in Parson's it seemed to flow right through parallel to the axle. Professor Kennedy spoke very highly of it, and said that under certain conditions it used only 20·3 lbs. of water per horse power per hour. That seemed to give better results than Mr Morton's. Laval's engine seemed to be a very interesting specimen, although he could not clearly understand the details from the sketch on the black-board; but he thought it was of such an interesting character that Professor Jamieson should make a better sketch and have it put into the Transactions. He thought that Mr Morton had shown great perseverance in working with his engine, and had been doing good work in investigating it, whatever the result might be.

Mr THOM said that he had been invited out to see Mr Morton's engine working. Mr Morton said that it was not ready for starting, but he could see it in a little if he would look at something else in the meantime. When he came back he was just on the point of saying, "When are you going to start it?" when Mr Morton explained to him that it was going full speed. There was no doubt about the engine being a nice working engine. He thought that Mr Morton had been too honest in giving them 80 lbs. of water per brake horse power, and he thought the other engine that had been spoken about would come nearer to the 80 lbs. if it was properly tested. He did not think they required to go to America to see the engine sketched by Professor Jamieson, because the engine that had been described was merely a re-action engine blowing against the wheel. One gentleman questioned Mr Morton's boiler about evaporating 10 lbs. of water per lb. of coal. Last week he had been down seeing a new tubulous boiler at Anderson & Lyall's, and they told him that they could evaporate 10 lbs. of water per 1 lb. of coal, and they had evaporation tanks there ready for any one to test for himself. He thought that some of the other gentlemen who were at the experiments might say something more about the engine before the discussion ended.

The CHAIRMAN thought this was a very interesting question.

Mr ANGUS MURRAY said he had seen the engine at work, and he was very much struck by the steadiness with which it ran. He was told about the steam and water consumpt, but he was not satisfied with the method by which that was gauged, and he told Mr Morton he thought that it was extraordinarily high. Reference had been made to Brown's engine, but it bore no comparison. As regards the form of the turbine, there was one thing that he felt baffled with—why multiplicity of the wheels should give higher efficiency. It was certainly a very instructive little engine, but since Mr Morton had shown how a partial vacuum is caused by the flow of steam through a curved tube on the convex side and a plus pressure on the concave side, could the same effect of a number of wheels not be got in one wheel by simply forming the outflow jets on the one side, allowing the steam to flow over or through the wheel and back towards centre through the reverse jets on the other side? Perhaps Mr Morton had tried this, but it appeared to him that the only useful effect that could be got was from the issuing of the jets round the circumference, or at the centre, and that would only be in proportion to the fall in pressure. It would be well if Mr Morton could lay before the Institution the full particulars of the tests as made.

Professor BARR said that Mr Thom had expressed the view that they had been too honest in their report on this engine. They had tested this engine by the usual method which would be familiar to all of them who took an interest in accurate engine testing—namely, by finding the amount of heat that was rejected by the engine and adding thereto the heat equivalent to the amount of work done by the engine. That was by far the best way to find in a test of moderate duration the amount of heat supplied to a jet condensing engine. In determining the weight of water passing through the condenser per minute, he used the V notch of Professor James Thomson in preference to the ordinary rectangular gauge notch. The temperature of the condensing water and the temperature of the water ejected from the condenser were measured. These measurements gave at once

the amount of heat rejected by the engine. In calculating the weight of steam used per minute from the value found for the heat supplied to the engine, the only difficulty (and it was a difficulty that one always had in those tests) was to know whether or not the engine was being supplied with dry steam or wet steam. They had assumed that the engine was receiving saturated dry steam. The boiler probably supplied steam slightly wet, but for the convenience of experiments Mr Morton had throttled the steam between the boiler and the engine, and that throttling would partially dry or superheat the steam, the actual character of the steam after wire drawing being dependent upon the percentage of moisture in the steam before the throttling. They had, as he had said, assumed the steam reaching the engine to be dry, saturated steam. He thought there was probably very little error there. He did not think that a brake of any ordinary kind could be put on an engine running at such speeds. They had determined the "brake horse power" of the engine by causing it to drive a dynamo, determining the electrical output and correcting the latter for the efficiency of the dynamo as determined by a series of special tests. That was what Mr Morton had referred to and what Professor Jamieson criticised as not being brake horse power. He did not know what he could add to the paper.* He was not responsible for this paper, which was one on the construction of the engine, and not upon the trial carried out by Mr Mavor and himself. If Mr Morton wished at any time to bring the experiments before the meeting, it would be his duty to uphold the experiments, but the experiments were not before the meeting. He was very pleased to give all the information as to the method of experimenting, but he did not think it was necessary for him to go into the method when it was the usual method taken by the best authorities in testing steam engines for economy.

Mr JOHN BARR said that if they had to reduce their speed from

* At General Meeting of 19th December, 1893, Professor Barr's remarks on this paper were insufficiently reported for publication in the following issue of Transactions.—ED.

4000 or from 20,000 to 30,000 revolutions per minute to 100, there must be a great absorption of power somewhere. He thought it was the power they got in their shaft that was really the power they could count upon as given out by the engine. That was the real gauge of the developed power of the engine. Very few of them wanted a machine to run at 4000 revolutions. It might do for running dynamos or such high speed machines, but for ordinary driving very much less was a better and more profitable speed. He knew from the experiments made in 1887, by the Royal Agricultural Society at Newcastle, that with a simple engine (*i.e.*, non-compound) the results then given were that they got an average consumption of about 26 lbs. of steam per brake horse power per hour, and with a compound engine about 21 lbs. In the face of that it would look as if this engine of Mr Morton's was a good bit behind, but, nevertheless, he thought that they were greatly indebted to him, and ought to give him every encouragement to reach a better result in the future.

Professor JAMIESON stated that, with reference to what Mr Barr, of Kilmarnock, had just said, it would be encouraging to Mr Morton and his friends who were interested in his high-speed rotary engines to learn that the well-known firm of Messrs Siemens Brothers had thought it worth while to clear out most of the shafting and belting from their extensive telegraph cable and electrical engineering factory at New Charlton, Kent, and to substitute therefor electrical transmission of power. They had put down three sets of high-speed, direct-driven steam dynamos in a central position near their boiler-house. From the main switch board in the dynamo-room, electric cables conveyed the necessary power to dynamo motors, which *were coupled direct* to the several tools or machines throughout their works. These motors could be started or stopped at a moment's notice by simply turning a switch. No power was therefore absorbed when the machines were stopped, and the motors acted so automatically that they only took power from the central source in almost direct proportion to the work to be done. This was a great advance upon the system of keeping

long lengths of shafting and many belts moving in order to meet the demand for variable loads. Messrs Siemens Brothers not only found that they had thus a much more lasting and flexible system of power distribution, but that it cost them several hundreds of pounds *less* per annum to run their works. He therefore thought that any sensible engineer who had to design *new* works extending over a considerable area of ground and demanding variable loads, could not do better than adopt electrical transmission of power in the manner he had just related.

Mr STROMEYER said, with reference to Prof. Barr's remarks about the measurement of the moisture in the steam, that Mr C. J. Wilson, who had carried out the chemical tests for Professor Kennedy's marine engine trials, had introduced a method which worked extremely well. The principle consisted in comparing the saltness of the steam with that of the boiler water, and the accuracy depended upon the action of nitrate of silver on salt. It was a very sensitive test, as could be judged from the fact that with only 1 per cent. of salt in the boiler water, 1 per cent. of priming water could be accurately determined to the second decimal. He had seen the test carried out only that day on some water that contained $\frac{1}{100}$ per cent. of salt in solution, and the amount of nitrate of silver solution, which was required to precipitate it, amounted to about $\frac{1}{4}$ ounce. The process was a very simple one, and could be carried out by any intelligent sea-going engineer. To one part of salt boiler water should be added about 100 parts of pure condensed water, and to this would have to be added a small quantity of yellow chromate of potash solution (concentrated). Then a nitrate of silver solution containing about $\frac{1}{10}$ per cent. of this salt was slowly added. With each drop the salt water would locally turn orange red, but this colour would at first disappear, though later on, when all the salt had been acted upon, the whole fluid would change colour from a pale yellow to orange. The process has now to be stopped and repeated on the condensed steam from the engine, but undiluted with distilled water. The ratio of the quantities of nitrate of silver solution required expresses the amount of priming in per

cent. The most convenient quantities to be used are 1 cubic centimetre of boiler water and 100 cubic centimetres of condensed steam.

Prof. BARR said he had heard of the method that Mr Stromeyer referred to, but he had never seen it tried. He asked Mr Stromeyer whether he would consider it applicable in the case of an engine using nearly dry steam, and working with a jet condenser, or whether the dilution by the injection water of the very slightly salt steam would not render the result untrustworthy?

Mr STROMEYER thought the result would not be untrustworthy, but one might concentrate the solution by boiling, but the test was so sensitive that he thought it would suffice under all circumstances. If there was danger of the condenser leaking, or if a jet condenser were used, it would be best to condense some steam taken from the main steam pipe, but as the priming water would doubtless have settled down already it would certainly be more accurate to take the condensed water from the condenser.

Professor BARR said that there was nothing more difficult than properly to sample steam. If they took a sample out by a connection let into the steam pipe at right angles, the particles of water might rush past the connection, and make the sample much drier than the average. He thought the best way of sampling steam flowing in a steam pipe would be to draw the sample through several small nozzles directed against the current, and distributed over the cross section of the steam pipe; but even then it would probably be necessary to ensure that the velocity of flow through the nozzles was the same as the velocity of the steam past them by making the volume per minute of the sample bear the same ratio to the volume per minute passed on as the combined area of the nozzles did to the remaining area of steam pipe section. Even then it was questionable if the bulk would be identical with the sample. He certainly thought it was the case that when steam was sampled by the ordinary methods, the sample was not a trustworthy indication of the actual dryness or wetness of the steam as it was passing in the pipe.

The CHAIRMAN—I think you mean that your steam would be more condensed through contact with an injection of salt water.

Professor BARR—No, I was speaking of fresh water. There was not only the great dilution of the slightly salt water in the boiler by the condensed steam, but the further great and possibly impure dilution by the condensing water in a jet or ejector condenser. If, on the other hand, the steam were sampled, there was the initial difficulty of fairly sampling the steam, which he believed to be a very serious one.

Mr STROMEYER—Mr Wilson told him that in the experiments by Professor Kennedy for the Research Committee of the Mechanical Engineers, he never detected priming in the marine boilers except in one case where it was less than one per cent., but he stated afterwards that he had come across a land boiler in which he measured 15 per cent. priming water. Until then he had only attained negative results, which was discouraging, but after this last result there could be no doubt that the test was a practical one.

Professor BARR said a small percentage of moisture in the steam would not have a perceptible effect. They did not measure the feed water, but simply the amount of heat rejected by the engine.

Mr MORTON said that at that late hour of the evening he would do more justice in his answers to what had been said by so many different members by writing his reply. As to Professor Jamieson's diagram, the same engine had been published thirty-five years ago in *The Practical Mechanics' Journal*, Glasgow, 1858, with the only exception that in the Laval machine the delivery jet was widened towards the mouth, whereas the other was contracted. In his paper (Fig. 11, Plate VI.) he thought he had shown that a widened mouth would not give a greater result than one contracted. He thought the other members had so far very nearly answered each other, and he was very glad to have this opportunity of inviting any of the members to see his engines under steam, say on Thursday first. They would then see them working and judge for themselves. Seeing there was another paper to be read, he begged to be excused

at present, as he would prefer to write his reply to the other remarks.

On the motion of the Chairman a hearty vote of thanks was given to Mr Morton for his paper.

Mr MORTON'S reply :—

I have carefully gone over the remarks made by those of the members who have so far interested themselves as to take part in the discussion on my paper, and I shall here endeavour to reply to each as briefly as I can.

Professor Jamieson objects to my use of the word "duty" and "electric or brake horse power." The words could certainly have been different, still my meaning would have been the same, and I have no doubt the members fully understood me. He also would have preferred that I should have taken special notice of his paper on "Brown's Rotary Engine." I am surprised that the Professor has not seen that all engines falling under the category indicated by Figs. 2 and 3 (Plate IV. of my paper) are included, and the merits or demerits of one apply equally to all. The rotary engine was introduced in my paper only for the purpose of showing the distinction of principle between the well-known rotary engine and my new re-action engine.

He also complains of want of data. He was the expert himself who conducted the experiments or tests on the rotary engine he has referred to. Had I conducted the tests on my own engine, I would have been more explicit in giving details, &c., of the method; but any figures given by myself might then be looked upon by the members as questionable.

As explained in my paper, Professor Barr and Mr Mavor conjointly were the experts, and had either of these gentlemen thought proper to give the Institution a paper on the subject, a series of figures would likely have been included. My paper was a general paper descriptive of my new engine, and how it differed in principle from that of the ordinary rotary engine, avoiding figures or formulæ

as far as I could, as I am aware that in this and kindred institutions these are only appreciated by the few.

I have since the discussion read over the Professor's paper on Brown's engine, and see no good reason to make further comments thereon. I have also read a paper by the Secretary, Mr. Millar, on "The Re-active Influence of Steam," which bears directly on the subject under discussion; and I think the idea well worthy of notice. From my experiments with injectors and ejectors hung as pendulums, some of which were described in a paper read before the Philosophical Society (Session 1874-5), I am of opinion that the re-active pressure he has given, calculated from noted data, would be greatly increased if the steam jet were surrounded by a properly arranged conical combining nozzle, and it again surrounded by a conical induction nozzle, all three combining and delivering in the form of a solid jet astern, a considerable propelling power would be obtained—first, by the steam jet itself rushing into a partial vacuum at a high velocity; second, say fifty times the weight of the steam at a proportionately reduced velocity; and lastly, the induced current of additional water passing through the induction nozzle at a velocity still double the speed of the vessel itself. With such an arrangement, a vessel whose engine had been disabled might run out of reach of the enemy or into the track of assistance. I think an experiment on a torpedo boat or a high-powered yacht could be simply applied, not costly, and the data obtained would be of considerable importance.

During Professor Barr's remarks, after describing the well-known method adopted in testing my engine, the question of dry or wet steam cropped up, which, although no part of my paper, elicited from Mr Stromeyer a description of a very ingenious chemical method of detecting the percentage of moisture in steam, which is new to me. I may however add a mechanical method which I have occasionally adopted. With an ejector condenser the flow of cold water from a constant head, and under an adjusted constant vacuum, is a constant certain weight per minute when no steam is admitted, or before the engine starts, and may be measured

correctly by its depth of flow over a notch and its cold temperature noted. So soon as the engine is at its work the flow of water over the notch becomes increased by the added weight of steam, carrying with it the entrained, priming, or other water, and again the flow may be measured and the increased temperature noted, and corrected for the expansion of water at that temperature. We know from the total heat of steam that were the added quantity to agree with the increase of temperature in the mass of water, then the steam had entered the condenser as saturated steam; if, on the other hand, the added quantity were found to be less than the temperature of the mass accounted for, then the steam entered the condenser as superheated steam. But we generally find the added quantity to be greater than the temperature of the mass accounts for, in consequence of the additional water resulting from the heat which had been converted into work; therefore that which is still greater is so much entrained water carried into the condenser by the steam.

A deep, narrow notch, so as to give a considerable rise in the level of flow for a slight addition of water, gives very near results by this method.

Mr Russell has referred to C. A. Parson's engine, and to the high state of efficiency in which Professors Ewing and Kennedy had found it. This engine had seven separate compartments, enclosing seven separate wheels, all mounted upon a shaft, and each wheel fitted with several rings of blades increasing in diameter towards their periphery, and were acted upon by the impact of the steam against them in about forty stages of expansion, and exerted about 150 H.P.; whereas my engine, tested by the experts, has only one compartment, enclosing two wheels, with five stages of expansion or re-action, exerting about 10 H.P. Small engines in general do not turn out so economical as large engines, and if there be a virtue in increasing the number of stages of expansion, there lies the hope of future economy. The fall of pressure at each stage in my engine is very probably too great as at present arranged.

In reply to Mr M'Whirter's remark regarding the evaporation of

boilers, I assumed 10 lbs. roughly, as a convenient and not out of the way figure, as Mr Thom has explained may be shown to any one.

I very probably do not understand Mr Murray's proposed wheel; but if he means to have outflow nozzles on one side of a central moveable disc, and to arrest the steam issuing from these nozzles by any portion of the wheel itself so as to direct the steam through the disc to the other side of the wheel, then the action of arresting would be equal to the re-action of the jet, and therefore there would be no motion whatever. He says he is not satisfied with the method by which the consumpt was gauged; but the method of testing my or any engine forms no part of my paper. Still, I may add, the method adopted by the experts in testing my engine was the method adopted by the late Professor W. J. M. Rankine, whose name and fame require no remark. To satisfy myself that the arrangement and right angled V notch, adopted by the experts during the trial referred to in my paper, was practically correct, I first tested the water meter, which was a new one supplied by the Corporation (Kennedy's patent), by weighing the water in a box capable of holding 100 gallons, and after repeated trials I found that with water at 40 degrees Faht. the meter indicated from 2 to 3 per cent. less than the weight delivered, taking 10 lbs. as the weight per gallon at this temperature, which is almost that of maximum density. I afterwards led the hose from the meter into the tank arranged with the V notch, and by adjusting the valve at the meter to various degrees of constant flow through the notch, I found that the formula with Professor Thomson's revised constant ($Q = 2{\cdot}54\ h^{\frac{5}{2}}$) gave practically correct results, or within the limits of the errors of observation.

Mr Barr, Kilmarnock, appears to think high speeds out of the question, and no doubt refers to the days when large engines were employed driving the whole of a factory, with large gearing and heavy shafting running at 100 revolutions per minute, the speed he has said. These are facts of the past, and engineers now prefer, where shafting is indispensable, a series of light lines of shafting,

each coupled direct with a small engine running at a much higher speed; and wherever shafting can be dispensed with, it has been the rule, for at least a quarter of a century, to combine a small engine on a large machine so as to be driven together, dispensing entirely with shafting and belting. Witness the punching and shearing machines, rolls, planing machines, &c., with a high speed engine combined on each, in our shipbuilding yards. No engineer would design a factory for driving wood working machinery, hydro extractors, lapidary, and other grinding and polishing wheels, etc., where speeds of some thousands of revolutions per minute are required with shafting running at 100 revolutions per minute; and the fact of Messrs Siemens Brothers having altered their whole factory so as to dispense entirely with shafting and belting, as explained by Professor Jamieson, points to shafting in the near future becoming a relic of the past.

With regard to Mr Barr's remarks anent the experiments made in 1887, the engines he refers to were no doubt reciprocating engines, and consequently have attained their state of efficiency through a century's labours of the best mechanicians of our country, whereas the re-action engine, in a sense, has been entirely neglected, and is therefore not comparable unless at or under 10 H.P.

For the last five or six years I have devoted my time in experimenting and designing this re-action engine, and although one day sick with failures, another day made me a little elated with successes, believing that the heat or energy in steam could be converted into work, otherwise than by a cylinder and piston. I continued my labours until the engine improved so as to be presentable to you in the form I have described in my paper. I by no means consider it perfect, but when I tell you that amongst the first single outward flow wheels I tried, with the steam blowing freely through the nozzles into a good vacuum, the consumption of steam was more than three times what it is now, therefore, no wonder many engineers, able in other matters, considered the re-action engine a mere toy, incapable of ever doing actual work.

This reply has extended beyond the limits I had expected. I

now thank the members who have honoured me with a visit to see the engines at work, as also those who have taken part in the discussion, and I hope to be able to present to you a more economical —although not more durable or reliable—engine on the same principle at a future time.

The Secretary has added to Plate VII. Figs. 9, 10, 11. These represent the general arrangement of a rotatory steam engine made by Mr David Napier about 1845, and tried on a paddle steamer on the Clyde.

The drawings from which the figs. on the plate are copied were supplied by Mr Thomas Wingate.

Any information regarding this engine and steamer would be a valuable contribution to the Transactions.

On "Automatic Adjustments for Bearings."

By Mr W. A. M'WILLIAM.

(SEE PLATE VII.)

Received 19th, and Read 23rd January, 1894.

IN the paper which I have the honour of reading before you, I intend to bring to your notice the construction of self-adjusting bearings. Such a bearing is, of course, only required in places where there is a reciprocating motion. The typical instance of this occurs in the connecting rod end of any engine. If the brasses could always be kept a close fit on the crank pin a large amount of wear and tear would be saved, and there would be less risk of break-down, besides a diminution of the noise which most machines make, more or less, when working.

High speed double acting engines are cases in point. They are much used now-a-days for electric lighting, driving centrifugal pumps and fans; and though carefully adjusted at first by the makers, after a short time they often "knock," due to slack bearings. And even with engines running about 100 revolutions per minute the same state of things may be noticed.

In engines which are required to run for some time without stopping, this is a serious defect, which sometimes leads to breakage of the crank pin, etc.

High speed engine makers, I understand, rely for the quiet running of their engines on cushioning the steam nearly up to boiler pressure; but really, any variation of steam pressure or speed is enough to disturb the state of the equilibrium. For instance, when

an engine is arranged to exhaust either into the atmosphere or into the condenser as circumstances may require, if the steam cushioning is perfect when exhausting into the atmosphere it will not be so when exhausting into the condenser, and *vice versa*. Also, by excessive cushioning a large portion of the effective area of the indicator diagram is cut off, thereby entailing a loss of power.

The direction in which improvements in high speed engines have hitherto been made is to make them single acting only. Owing to the steam pressure being always on the one side of the piston, loose brasses and consequent knocking seldom take place. I have no experience with these latter, yet I have it on good authority that even a single-acting engine connecting rods sometimes break owing to knocking.

If a perfectly quiet double-acting engine could be obtained, there is no doubt it would be sought after, because for a given weight of metal double the power is got out of a double-acting engine over that got out of a single-acting one, other conditions, such as speed, being equal.

The question therefore resolves itself into these three points :—

I.—A method is required of easing any shock otherwise unbalanced *at the place where it occurs*.

II.—To automatically take up the wear of the bearing without causing initial, and therefore useless, pressure on the journal.

III.—To provide a perfect nutlock.

The arrangement which I wish to bring to your notice to-night is a device of my own, designed with a view of fulfilling the above mentioned requirements.

In the drawing I have here, the big end of a connecting rod is shown with bolts as arranged for a vertical engine. You will notice that the tail ends of the bolts are in the rod, but it really does not matter whether they are in the rod foot as shown or in the bearing cover. In the latter case a more compact arrangement is possible, because these outlying springs may be brought in between the nuts,

which is impossible here, as the rod is in the way. The brasses are left open in the centre to allow them to come together automatically under the action of the gear, which I will now proceed to explain.

The construction is as follows:—Each nut is turned for a portion of its length, very much like the ordinary style of set screw lock nut now in use, only deeper. The upper part of each nut is left hexagonal for spanner purposes.

A peculiarly shaped ring fits loosely on this round part, and encircles it. A little pin is fixed in this ring, parallel to the bolt, on which pin is pivoted a cam lever. This forms the well-known combination of the nipping lever, or, in fact, a sort of pipe tongs. The inner end of this nipping lever bears on the round surface of the nut, and when pressure is applied to the other end, grips it.

The outer end of the lever bears on a striking pin, fixed in the bearing cover, or rod foot, as the case may be. This pin has an inclined surface, which fits a correspondingly inclined surface on the lever.

A small spring keeps the various surfaces all hard against each other, so that there is no "backlash" in the gear itself. One end of this spring is riveted on the ring, the other end being shaped in the form of a loop, which is slipped over a hook on the top of the striking pin.

(Models and drawing here explained.)

The action of the device is as follows:—

Suppose the brasses from the effects of wear or otherwise to be slack enough to cause a knock. At the end of the engine stroke the journal comes against the bush suddenly and communicates a shock to the cover. *This lifts the cover relatively to the nuts.* The inclined surfaces on the striking pins force the ends of the cam levers aside a little way, and, as these levers act as pipe tongs, they turn the nuts round with them.

When the effect of the blow has subsided—that is, immediately after the commencement of the stroke—the rings and levers slide round the nuts back to their proper position under the action of

these looped springs, and are ready to tighten the nuts a bit more at the next shock from the crank pin.

A heavy buffer spring, strong enough to take the whole engine pressure with a very slight lift, is placed underneath each nut to give the bearing some slight elasticity. These springs put no initial pressure on the bearing, because the gear will not act so long as no knocking occurs. All action ceases as soon as the nuts, springs, and cover are in constant contact.

In order to prevent the rings and levers from slipping down the nuts, a shallow groove is turned on the round surface of each nut, into which the jaw of the lever, by a simple locking arrangement, fits. Also, a small clip is partly shown in the drawing riveted on to each ring. The other end of this clip extends downwards and abuts on the edge of the groove in the nut, and so prevents the ring from slipping down at all.

I have applied this apparatus to a small steam engine with a view of testing its working. I determined, experimentally, that this lever and pin arrangement does actually screw the nuts down into position; but, owing to a variety of circumstances, I had no opportunity of making a prolonged test with regard to the durability of the contrivance.

The gear may be made of wrought-iron or mild steel. I have shown it here as wrought-iron merely for distinction, the connecting rod and bolts being steel. But all the parts must be case-hardened.

It will be seen that this device fulfils the conditions I referred to before.

1st.—That it eases any shock otherwise unbalanced by means of the spring washers. Also, that it takes up the wear of the brasses automatically and provides a perfect lock nut arrangement, because, if by any means either nut became loose, it would be tightened up again by the knocking occasioned.

I might notice briefly the various other schemes for the accomplishment of the same purpose. There are, I believe, in use india-rubber washers, which are placed under the heads of the bolts, and are

screwed up tight, the brasses being left open in the centre to allow of adjustment. These washers are, of course, liable to deterioration from heat, oil, and the severe pressure, so that in time they become crushed down, and the brasses get loose.

This cushioning arrangement occurs in another form, in the shape of long spiral springs, like those used on safety valves. The bolts are made about twice the usual length, and the springs are placed one on each bolt, with a nut on the top. This form is also open to the objection that initial pressure is placed on the journal.

It has been objected that the steel buffer springs I have described would in time themselves deteriorate. The effect of long usage would be, I should suppose, that they would gradually become flattened out. How much they would shorten in a given time it is impossible to say. But some small amount of shortening will not matter as long as the spring still has room to play about $\frac{1}{64}$ inch or less, for the tightening gear takes up wear both in the springs and brasses. The balance spring of a clock lasts ten years or more, and it is worked through a pretty wide range, while the springs I mentioned are worked through a very small range indeed. On the other hand, a high speed engine runs perhaps at 600 revolutions per minute, while the clock spring only makes 60 vibrations per minute, so that something may be said on either side.

The fact of thus having a slightly elastic bearing would be found an advantage, I should think, when the journal pin is worn oval, as is sometimes the case.

In conclusion, gentlemen, I may express a hope that this slight essay will not prove entirely without interest to the members of the Institution, and trust that it may have the effect of producing a good discussion on the subject of bearings generally, and on this one in particular.

Reference to Fig. 1, Plate VII.

A. Special nuts used.
B. Rings surrounding same.
C. Nipping levers.
D. Striking pins rigidly fixed on rod or cover.
E. Heavy buffer springs.
F. Small springs attached to rings and hooked on to striking pins to keep gear in position.
H. Small groove turned in nut to prevent lever from slipping down. The jaw of the lever works in this groove.

The discussion on this paper took place on 20th February, 1894.

Mr CAREY thought the Institution was under an obligation to Mr M'William for placing before the meeting a paper on which he had evidently bestowed considerable pains and industry. The invention which he brought before them had been made with a great deal of care, and although it would be perhaps ungracious to criticise the invention too captiously, he could not help thinking that perhaps the end which the author had sought might be got in some easier way. If he was wrong in that he would be very glad to be corrected. It was hardly necessary before such an audience to refer to the well-known lock-nut which had been invented by Mr Stephen Alley, and which might be seen on any of the high speed engines manufactured by the firm of Alley & MacLellan of this city. Many of them would have seen it, and all of them were probably aware that the slack which certainly rose constantly in the bearings was taken up by a small, but strong, spring inserted inside the nut, which otherwise was of the ordinary construction. The nut itself had seven grooves in its upper surface, into which the small lock bar was fastened, and as these were unequally spaced, and the lock bar

was able to turn over, it was able to be securely fixed in fourteen different places. He believed the performance of this lock-nut had been very satisfactory in every way, and it certainly seemed to him to answer the purpose for which it was intended, in a very simple, cheap, and effective form. Referring, however, to this subject, he had recently come across an invention for securing the fish plates of rails, by means of an invention which, to himself, was new, and it seemed such a remarkably simple and easy form, that he ventured to bring it before the Institution. He handed a bolt to the President, and asked that it should be shown to the meeting. The principle was extremely simple. The lock-nut simply worked by the action of gravity. Any jar on the rail, due to a passing train, which would tend to slack the main bolt, was instantly locked and closed by the action of gravity on the weighted lock-nut. He was unable to see where the invention might fail, for any rusting up would be obviated by vibration. He would be very glad to know if any of the members had practical experience of that, and if there was any cause of failure in it, where that cause was.

Mr M'WILLIAM had heard of the eccentric lock-nut, mentioned by Mr Carey, and he believed it was adopted very successfully on various railways in Ireland for the bolts holding down the rails. It was only suitable on bolts which were in a horizontal position, for the action of gravity would not come into force if the bolt was upright. Also, he did not see exactly how they could bring the heavy part of the nut on the right side of the bolt always; it would depend greatly on the tapping whether it would come on the right side or not. It might be on the side on which the action of gravity would tend to slacken the nut. There are other forms of lock-nuts—notably that used in conjunction with a spring washer. It was greatly used in America he believed. There were various forms of it, but the simplest form was like an ordinary washer split on one side, and given a bit of a twist. It was made of best crucible steel, and it was put on a bolt with a nut on the top of it, and screwed down. That spring washer neutralised any vibration that there was in the plate that was being bolted down, and it was very suitable,

he believed, for fan cases, where there was a great deal of vibration. In searching the patent record he came across a specification lodged by Messrs Allen, of London, for an automatically adjustable bearing. It appeared that it was allowed to drop. The time had expired, and apparently Messrs Allen had no confidence in their own invention. By a recent amendment of the Patent Acts these dropped specifications were not published, so that he did not know what it was, but apparently it was of no use at all. He had not heard of any other means for automatically drawing the bearing brasses together, further than his own, and he would like to hear if there was one. He understood that there was a model of Messrs Allen's arrangement in Glasgow, and he had not been able to discover it yet. He believed that it was at one of the institutions. Further than that he had nothing more to say. In conclusion, he begged to thank them for their kind attention to his paper last evening.

Mr GEORGE RUSSELL said he would like to ask what the spring was made of. There was a short spring, and it was not very clear how it acted. It appeared from the drawing to be a solid washer.

Mr M'WILLIAM said that in the model it was made of a piece of clock spring, but usually it was made of a piece of $\frac{3}{8}$ths by $\frac{1}{16}$th steel spring. The other buffer spring was made of the same stuff, but much heavier. Leather or india rubber might be used, but this would most likely deteriorate, and it might be affected by oil and heat. He had shown it diagrammatically. He had used various substances, such as hard wood; and a split washer would do. It was about the easiest thing to make, and the spring might be made like the springs used on the ends of railway carriages, with a flat washer under the nut.

Mr RUSSELL—Would there be any possibility of tightening it too much?

Mr M'WILLIAM—I have not found any, and when an engine is running sweet there is no knocking at all, and therefore no tightening takes place.

Mr RUSSELL—But if there was water in the cylinder and knocking, would it have any effect on the action of the gear?

Mr M'WILLIAM—I think the knocking would be lost before it was transmitted through the piston and connecting rods to the crank pin brasses.

On the motion of the President a vote of thanks was given to Mr M'William for his paper.

On "An Overhead Power Travelling Crane."

By Mr GEORGE RUSSELL.

(SEE PLATES VIII. AND IX.)

Received and Read 20th February, 1894.

FOR the purpose of lifting and traversing weights in engineering, boilermaking, and many other workshops, overhead travelling cranes are now generally employed. This type of crane has the advantage of leaving the floor space quite clear, while covering for practical purposes the entire area.

Manual labour is sometimes the motive power, but in most cases steam or other mechanical power is used. The steam engines and boiler are sometimes mounted on and form part of the crane itself. This arrangement is suitable for a foundry or for a crane which is not covered by a building.

In engineering workshops the power is generally communicated either by a square shaft on tumbling bearings, fixed to one of the side walls or to the columns supporting roof, or by an endless rope, running in grooved pulleys at a considerable speed. The former arrangement should only be adopted where the workshop is clean and not much dust or grit flying about, as the bearings on which the shaft revolves must be open on the top; and further, the sliding sleeve carrying the driving-wheel soon wears till it gets very slack on the square shaft, and becomes noisy. The driving by endless rope is better, and especially if exposed to dust.

In the 10th volume of the Transactions of this Institution there

is a paper describing an overhead rope driven crane to lift 15 tons, by the late Mr William Smith. Although 27 years have since elapsed, cranes similar in general arrangement are made to this day. In this type of crane the rope communicates the power to the crab by a V-grooved pulley, keyed on a square shaft, carried on tumbling bearings, and which extends the whole length of the bridge of crane on one side. A similar square shaft on other side of bridge communicates the power from the crab to each end for longitudinal travelling.

These two shafts have the same objections with regard to wear as has been mentioned in reference to the shaft along the building, when used instead of rope.

It seems, therefore, very desirable to obviate the use of square shafts with sliding sleeves and open bearings.

Round shafts having a grooved key-way throughout are sometimes used instead of square sections, but the same objections apply to them also.

Many overhead travelling cranes are made which occupy a considerable amount of head-room, so that a large proportion of the height of the building is lost; and in many cases the crab, which carries the hoisting and other gearing, is so long that the lifting-hook has a comparatively short cross traverse, and cannot approach near enough to the side walls of building.

It is of great importance that the lifting-hook can ascend as near as possible to the roof, and approach as near as possible to each of the side walls.

The path of the hook ascending should be exactly vertical, as precision is necessary in erecting machinery.

The great improvement in the manufacture of flexible steel ropes in recent years, and the high quality now obtainable, has caused chains to be superseded by ropes to a considerable extent. The barrels and pulleys should be of large diameter, and accurately grooved in lathe to fit the ropes exactly. Ropes work much sweeter and are less liable to accident than chains, and are in every respect more suitable for overhead power cranes.

I propose to describe a crane which I have designed specially for engineering erecting shops, and which combines the advantages already mentioned. The size shown on the photograph exhibited and the drawings is to lift 35 tons, with a span of 40 feet 6 inches.

Fig. 1, Plate VIII., is a side elevation, and Fig. 2, Plate VIII., a plan of the *rope driving* arrangement, which is on the same principle as the 20 ton overhead crane which was used to place the machinery in the Glasgow Exhibition of 1888.*

A is the driving pulley on a counter shaft at one end of the building. B is the driven pulley on crane, keyed on shaft, which actuates all the movements. The guide pulley C is at opposite end of building, and the guide pulley D is on crane. The lead of the driving rope is clearly indicated on Fig. 1, Plate VIII. From the under side of A to C, thence to D and B, and from under side of B to A, the bearing on all the pulleys being half the circumference. The D and B pulleys revolve in the same direction, so that there is no *reverse* bending of the rope, as is the case in the usual arrangement where there is a guide pulley at each side of the driven pulley on crane. The pulley D is set at an angle, so that the part of rope leading from A to B will clear the part from C to D. The rope is 1 inch diameter and runs at 2000 feet per minute.

Fig. 3, Plate IX., is a side elevation of the crane. The rope pulley B is keyed on a shaft which carries three sets of double friction clutches marked Nos. 1, 2, and 3, each set being controlled by a hand-wheel, convenient to the driver, who stands on the platform E, and has a commanding view of the lifting-hook and of the shop floor.

No. 1 controls the longitudinal travelling along the building, No. 2 the transverse travelling across the building, and No. 3 the hoisting and lowering.

The load is sustained on a flexible steel rope, a plan of the arrangement is shown on Fig. 4, Plate IX. The rope is doubled

---

* *Engineering*, 14th December, 1888.

over the fixed pulley F, then each end leads over pulley G on crab, then down to edge H of pulley on lifting block, and, passing under to J, ascends to pulley K on crab, thence to pulley L near end of bridge, and down to barrel M, which is grooved right and left hand, as shown on its plan, Fig. 6, Plate IX.

Fig. 5, Plate IX., is a horizontal section of the lifting block through the axle of pulleys. The pulleys are inclined at such an angle to each other that the edges H H are the same distance apart as the pulleys G G on crab, and the edges J J same distance apart as the pulleys K K on crab.

The pulleys on crab and lifting-block and the hoisting-barrel all revolve in the same direction, so that the rope is not *reverse bent* at any point of the lead.

The hook of the lifting-block rests on steel conical rollers, and so the load is very easily turned round.

The crab is traversed by two steel ropes, N and O; the rope N being passed over a pulley placed under F on plan, and thence to under side of barrel P at other end of bridge (Fig. 3, Plate IX.).

The rope O leads to upper side of same barrel P, so that when one rope is wound on the barrel the other is unwound. An appliance for keeping these ropes tight is fixed on the crab (Fig. 4, Plate IX.).

The round shaft Q Q, stretching the whole length of bridge, and carried on the fixed bearings R, couples the longitudinal travelling wheels.

The bridge is formed of two steel girders of box section, with sufficient space inside for access to paint, and with rails on top, on which the crab travels. The crab wheels are solid forged steel, with double flanges. The wheels, carrying the crane on longitudinal rails, are of cast-iron, with double flanged Bessemer steel tyres.

From the driver's platform a ladder leads to a gangway along the bridge, with hand-rails, for convenient access to oil and clean the working parts.

On reference to Fig. 3, Plate IX., it will be seen that the head room occupied is the diameter of crab wheels added to the depth of

main girders, and that this is the *minimum* possible. The top of the lifting rope pulleys is level with the top of crab wheels, and the lifting-hook may ascend till its pulleys touch the pulleys on crab. The hook approaches to 5 feet 9 inches from wall on the gearing end of bridge, and to 3 feet from wall at opposite end.

This design of crane has been adopted principally to obtain as much head room as possible for any given height of building. The increasing height of marine screw engines has rendered it necessary to have a pit excavated in the floor of the erecting shop in many establishments; but if sufficient height can be obtained without a pit, it is more convenient.

Mr W. R. M. THOMSON asked whether Mr Russell had got one of these cranes erected, or if he had any data of their actual performance.

Mr RUSSELL stated that there were several lately erected on this principle in this district, and he thought some of the members could speak of their experience of them by and by. The first that was made was to the order of the President's firm, for their Warroch Street Engine Works, where the erecting shop had become too low to suit the higher engines which were now being built.

Mr SINCLAIR COUPER said he was rather disappointed with the brevity of Mr Russell's paper. He expected that a crane maker of the distinction of Mr Russell would have gone into the matter at greater length, but he agreed with him that this was a paper which should be prolific of a very good discussion. He agreed with Mr Russell that a square shaft was not to be commended if a rope drive could be got instead. In very many engineering and machine shops the walls were not as shown in the diagram, of brick or stone, but were very often composed of columns about twenty feet apart, and a square shaft running the whole length of such a building was a constant source of trouble. The simpler they had their machines in shops the better. Where there was a square shaft, with a number of journals, with sleeves and sliding blocks to keep in order, a repair squad was kept constantly employed in those shops. He preferred

the rope driving system, and he had had experience of both. Mr Russell referred to the use sometimes of square shafts, or round shafts with grooves in them, for transmitting the motion from the main drive to the different speeds upon the crane. In such a situation he had generally found the square shaft to be more reliable than any other motion, although he had not had so much experience of that style as Mr Russell. There was another system, which he might have taken notice of, and that was one used by a Manchester firm, where everything was done by belt driving. The main drive of the crane was carried along the side walls by a square shaft, or fly rope, and connected to a counter shaft on the end of the crane carriage or crane girders. This counter shaft was fitted with fast and loose pulleys, carrying belts, one of which was open and another crossed, to give the motions when the crane was required to go transversely or longitudinally. He thought that for starting and stopping the crane, the belt was a very good arrangement, because they must all have noticed in the case of a crane lifting a heavy weight, when put quickly into gear for travelling, the crane started off immediately, and the weight, whatever it might be, started and swayed about, often to an alarming extent; whereas, with the belt gear in passing from the loose pulleys on to the fast, the motion was given to the crane gradually, and this swaying motion of the load was scarcely appreciable. However, for the lifting and lowering motion he much preferred the square shaft, because it was a very unfortunate thing when a belt broke at the very time when they were lifting or lowering, as he had seen happen, with the belt gear. He did not like Mr Russell's parallel girder. It might be useful in some respects; but in the case of a crane with a forty feet span, the girder might be three feet six inches deep at the centre, and that added to the depth of the end carriages, which themselves might be two feet, made five feet six inches of girder work, apart altogether from the winch and the pulleys on the top of the girders; and although it was useful to get head room below the crane they were sometimes tied for head room above. That was a thing that might be remedied with a fish belly

type of girder. He would like Mr Russell to tell them whether in his crane the load was easily slewed or swivelled in the hook. With wire ropes, instead of a chain, for lifting the block, there was not the same weight in the tackle and not the same inertia, and with a heavy weight the wire rope tackle rather tended to twist round, unless the hook was fitted with a very good swivelling arrangement, and Mr Russell might tell them how he overcame that difficulty, and what sort of swivelling arrangement he adopted in his hook.

Mr BURT said Mr Russell had claimed in his paper that his crane got closer to the wall than any other chain crane, and there must be a certain amount of room taken up by the gearing. He noticed two cranes last week recently fitted up, and the people were complaining that when the load was at one end the cranes had a tendency to swing round and jam on the wheels. He would like to know if Mr Russell got over that in any way. The weight being on the one end, evidently the one wheel had a tendency to slip, so that although a cross shaft was driving both wheels, the tendency was to jam in the longitudinal direction.

Mr THOMSON said that it would be well if some of those who had used the crane would speak to that point.

Mr RUSSELL said he had made the paper purposely short. There were specially two points he wished to describe—the arrangement of the driving and lifting ropes. Mr Sinclair Couper had referred to cross belts as a substitute for clutches, but he personally preferred the clutches. If he had preferred belts he would have used them, but he thought they were very apt to give trouble. He had not had experience of the difficulty to which Mr Burt referred. He did not know exactly where the difficulty came in. The wheels were driven simultaneously at both ends, and he had had no trouble about that. The shaft was sufficiently strong, so that the railway wheels might go in unison. If the connecting shaft was too light one end might be in advance of the other, but he did not think it could amount to very much at the most. There were only those two points that he had referred to—the arrangement of the lifting and driving ropes. These were the two points that he wished

to bring before the meeting. Replying to Mr Thomson, he might say that the first time this arrangement of lifting rope was used, was on the thirty ton crane for the President's firm. One to lift thirty-five tons had been put up at Messrs Blackwood & Gordon's, of Port-Glasgow, and Mr Carlile Wallace, of that firm, had written to him that he could not be at the meeting, but would likely be present at the continued discussion next meeting. Another point that Mr Couper had raised was the shape of the girder. In many cases they had just had to fill up the existing space of the building from rail to roof, and all that could be saved in weight by curving the under side of girders would be merely the portion of the web plates. Where there was room he preferred to have the girder straight.

Professor BARR—Perhaps Mr Russell could answer the question as to the lifting block coming near the end, he supposed the working gear to be all to the one side?

Mr RUSSELL said the gearing was central, but the rope on the pulley got close to the hoisting barrel. The platform was outside and to the one side. In Mr Inglis' erecting shop there was a machine space annexed, and he made a special arrangement and opened up the angle of the lifting block pulley more than was shown on drawing, so that the edges of pulleys embraced the barrel and got particularly close, because there were machines projecting through, and close to side of erecting shop, that it was desirable to command.

Mr JOHN BARR would like to ask whether Mr Russell found that the life of the rope was much increased by this improved method of bringing the rope over the pulley, and what his experience of driving ropes was, and the material that they were composed of; also whether cotton rope or Manilla rope answered best. With regard to the swaying motion that Mr Couper referred to, his firm had two or three cranes driven in this same style with friction clutches, but he did not think there had been any reason to complain about the load swaying when about to lift or lower.

Mr SINCLAIR COUPER said he meant when they start to travel, that is when they begin to sway.

Mr BARR said he did not think they had any trouble about that either, as far as he remembered. With regard to the friction clutches, these sometimes gave trouble, and he thought it would be a valuable addition to the paper if Mr Russell could give them some details of the friction clutches that he used. He quite agreed with what he said about the cross shaft. He thought the cross shaft was the better plan. He would also like to know whether Mr Russell had made any experiment, or could give them any data as to the efficiency of the crane with regard to the power required for driving. They had a certain load lifted in a certain time, which was equal to a certain horse power, and he wanted to know what indicated horse power was required to do that work, and how much was taken up with friction in the crane itself. He did not see clearly whether there was more than one lifting speed to the load. It might be that there is more than one speed.

Mr RUSSELL—There are two in the drawing.

Mr SINCLAIR COUPER asked to be allowed to add that he had not thought at first of speaking of the ropes that night, but he must say that he liked the method that Mr Russell had adopted. The method of guiding the rope shown on the blackboard, and usually adopted, was most destructive to the fibres of the rope. He never had had a rope running longer than twenty-two months, and he had pretty much the same experience with cotton ropes as with Manilla ropes. Very often the ropes gave out in twelve months. The chief cause for that was certainly that the pulleys were generally made too small, and the fibres of the rope were then bent thousands of times in opposite directions, especially when running at a speed of 2,000 or 2,500 feet per minute. The fibres of the rope thus suffered very much, and on opening the strands they found them like powder in the inside. When a rope went into that condition it very soon had to be condemned. He would like if Mr Russell would say what the life of a rope was under his system. He observed the cage was at the end of the crane, and he thought that was the best place for it. Such an arrangement gave the man an uninterrupted view of the shop floor. From the drawing it seemed

as if the rope block came only to the ladder, but apparently the block passed the side of the cage, and it seemed then that what Mr Russell claimed for it was perfectly correct, that no block could come so close to the side of the building.

Mr RUSSELL said that if the shop was not very long, he would not have to make the guide pulley, C, adjustable, but fixed, and let the rope droop, so that when the crane was not going, there was very little power required to drive it at all. If it was drawn very tight, to clear some obstacle, it made a difference in the life of the rope. He had a drive of the former description in his works, and the rope had been running for seven years, and seemed quite good yet. It was a hemp or Manilla rope.

The PRESIDENT thought they had better adjourn the discussion till the paper was in the hands of the members. The crane that Mr Russell had made for his firm had worked very well. At first the speed it travelled at was rather alarming, compared with that of the crane which it superseded, but they were getting accustomed to that now, and the working had been very satisfactory. The gain in height that they had with the new crane over the old one was seven feet. That was partly accounted for by dispensing with the tie rods, which existed formerly in the old crane, and the rest was due to Mr Russell's ingenious arrangements. They had plenty of room under the roof on account of the formation of the shop. They were unfortunate in possessing a shop thirty years old, which was an age in engineering life, and the choice was whether they would get a new crane or a new roof, and they found it more advantageous to have a new crane and keep the old roof.

The discussion was then adjourned till next meeting.

The discussion of this paper was resumed on 20th March, 1894.

The Secretary read the following communication from Mr D. J. DUNLOP, who was unable to be present:—The crane which I got from Messrs George Russell & Co. lifts 50 tons, and has four speeds, the second being two, the third four, and the fourth eight times

quicker than the slowest speed. The advantages of Messrs Russell's type of cranes are various, the principal one being the height to which the load can be lifted, on account of the arrangement of pulleys and traversing carriage, thus taking advantage of every inch of available headroom, and it may be claimed necessitating a lower roofed shop to carry on equal size of work where other types of cranes are adapted. The length of our shop is 135 feet, and the fast driven rope, which has been running for over a year, has required no tightening arrangement, nor do we find this at all necessary. The lifting hook, resting as it does on anti-friction rollers, enables the load, whatever it may be, to be easily turned round, this advantage, on Messrs Russell's cranes, I have found of great value in the 60-ton derrick crane they made for us 10 years ago. Both on the derrick crane and our overhead traveller we have adapted steel-wire ropes, between which and the ordinary link chain I do not attempt to draw a comparison.

Mr E. P. HETHERINGTON said he would like to ask Mr Russell, who seemed to lay some stress on the reverse action of the rope always running in the one direction, if that rope revolved during the time that it was spinning along the shop. If it did, the reverse action claim was of no account.

Mr GEORGE RUSSELL said he did not know that there were any remarks to reply to, because most of the points that were raised last night had been replied to by subsequent speakers, and by Mr Dunlop in his letter. As to Mr Hetherington's question, there was no reason why the driving rope should tend to revolve, and certainly either with the three pulleys close together as commonly used, or with the two pulleys in his arrangement, there was no time for the rope to do any revolving between the pulleys. In the whole length of the building it might slightly revolve if there was any irregularity in the rope. He thought that that remark did not apply at all as an objection to arranging two pulleys instead of three. He had to thank those gentlemen who had spoken, and Mr Dunlop, who had written, for the favourable manner in which they had criticised the paper.

On the motion of the President, a vote of thanks was awarded to Mr Russell for his paper.

Mr W. CARLILE WALLACE sends the following remarks:—Mr Russell supplied my firm with one of his cranes some six months ago, and since that time it has been in continued work, and given us great satisfaction. The reason why I decided upon Mr Russell's crane was, that it gave us considerably more head room than was possible with that of any other maker; I think some 2 feet to 2 feet 6 inches more. This, I need not say, is an immense advantage, owing to the increase in size of marine engines. Another important advantage in Mr Russell's crane is the way in which the pulleys are arranged for the driving rope; in the ordinary form the rope is bent back over two small pulleys at either side of the driving pulley on the crane, and this constant bending rapidly destroys the rope, due to the chafing of the strands against one another, whereas in Mr Russell's crane the bends are all in the one direction, and only very large pulleys are used. The arrangement of fixing the lifting hook in the block is very satisfactory, the heaviest loads being quite easily slewed without any apparent twisting in the ropes. As regards the use of wire rope in place of chain, I do not think there can be any difference of opinion as to the immense advantage and safety of this, provided the ropes are made by reliable manufacturers, and the wire carefully tested before being used in the rope, not only for tensile strength, but also for its capability of standing twisting without injury. In ordering some wire rope lately for our new slip I went to see the wire tested, and with galvanised wire of a very high tensile strength the average number of twists which a piece of wire 8 inches long stood was about 36 before breaking; whereas the Admiralty only require 20 twists in the same length. So far I think there is only one point in which Mr Russell's crane could be improved to make it one of the most perfect overhead cranes possible, and that is in the cross traversing gear; this is now done by wire rope, and owing to the stretching of this rope the cross motion is inclined to be jerky with heavy loads,

which sets up vibration in the crane and walls of the shop in which it is fitted, and I think if Mr Russell would turn his attention to some improvement in this direction in future cranes which he may manufacture, nothing further could be desired.

Note in reply to Mr W. Carlile Wallace.

With reference to Mr Wallace's remarks on the method of cross travelling, the wire rope stretches at first and requires tightening up. When the rope is new it must be frequently adjusted by the screws at each end of the crab till all the stretch is taken out. After that it works quite steady, and the inclination to jerk ceases.—G.R.

28th March, 1894.

On "The Glasgow Corporation Electric Light Supply."

By Mr WILLIAM ARNOT, A.M.Inst.C.E.

(SEE PLATES X., XI., XII., AND XIII.)

Received 19th; Read 20th March, 1894.

THE Provisional Order obtained August 14th, 1890, gave the Corporation two years to carry into effect the powers granted therein.

Lord Kelvin was consulted 9th October, 1891, and his advice was most decided on the advisability of supplying with a direct current at not more than 200 volts.

It having been decided to adopt a low tension three-wire system, Professor A. B. W. Kennedy, F.R.S., was requested on 12th November, 1891, to prepare a scheme.

A site was obtained in Waterloo Street, at the corner of Mains Street, and the contract for the building was signed on 7th April, 1892. On Saturday, 25th February, 1893, the arc lamps on the principal streets were first lighted, and the current was switched on to the incandescent mains on Saturday, 22nd April, 1893.

My paper on this subject would be incomplete without reference to the work carried out by Messrs Muir, Mavor & Coulson, Limited, previous to that date. Of the commencement and details of their work it is not necessary for me to trouble you. Suffice it to say that on the 1st March, 1892, the Corporation purchased the plant of that company which was then supplying from John Street an alternating current at 2400 volts on the mains. These mains

were all overhead, and the lamps were supplied at 100 volts, the pressure being reduced by means of a transformer in each consumer's premises. On the date of the purchase there were 36 consumers, taking current equivalent to the supply of 5000 eight C.P. 33 watt lamps. The Board of Trade granted permission to the Corporation to continue the use of these mains on the condition that they should all be removed by August, 1893.

To transfer the customers from the high tension overhead mains to the low tension underground mains was the first duty of the staff. This was done at the rate of about three per day, and John Street station was shut down on 11th May, 1893.

The site at Waterloo Street station measures about 31 yards by 31, and contains 972 square yards, having Waterloo Street to the north, Mains Street to the west, and Wellington Lane to the south, and a tenement of offices on the east side.

The building stands on a layer of concrete two feet thick, laid throughout the entire block. The main building stands fronting Waterloo Street, and covers half of the ground. It consists of the engine room, first floor with offices and workshop, and second floor with laboratory, drawing office, meter room, and cable floor. Behind the main building is the boiler house, with the battery room above it.

Boilers.—These consist of six marine type steel boilers, measuring 12 feet long and 10 feet in diameter, working at a pressure of 160 lbs. They have each two furnaces of the corrugated type, with an internal diameter of 3 feet. The fire grates are 5 feet long. There are 194 wrought-iron lap welded tubes in each, $2\frac{3}{4}$ inches external diameter and 8 feet 6 inches long, between the tube plates $\frac{1}{8}$-inch thick, stay tubes $\frac{1}{4}$-inch thick. A steel steam drum, 5 feet long by 18 inches diameter, is on each, with two 5-inch stop valves.

The mountings are very complete, being :—

Two safety valves,

Two automatic water gauges with plate glass guards,

Two shut down feed check valves,

Blow-off cock,
Scum cock,
12-inch dia. steam pressure gauge,
Attachment for test pump,
Attachment for engine indicator.

These boilers were all tested and passed by the Board of Trade Inspector.

A smoke box is on the front of each boiler connecting the tubes to an uptake which communicates with the main flue. This is led into the chimney at a height of 15 feet. There are no underground flues. Each boiler is covered with 2½-inch composition, and stands on two cast-iron brackets.

There are two Tangyes (steam 7-inch, water 4½-inch) pumps, each capable of delivering 4800 gallons per hour, either through a Wright's feed heater or direct. There is an injector connected to the cold feed capable of delivering 5000 gallons per hour. The water tank has a capacity of 3500 gallons. The steam pipes are 7-inch and 8-inch dia., steel, lap welded, with wrought-iron flanges screwed and brazed.

In the engine room the steam main forms a complete ring, slung by means of rods from cast-iron brackets. Four of the boilers have a duplicate connection to this ring, the remaining two have one connection.

Engines.—These are Willans' central valve compound engines of the following particulars:—

Two size G.G.—No. of cranks 2, dia. of L.P. cylinder 14-inch, H.P. 10-inch, stroke 6-inch, revolutions per minute 450, I.H.P. 78.

Two H.H.S.—No. of cranks 2, L.P. cylinder 17-inch, H.P. 12-inch, stroke 8-inch, revolutions 370, I.H.P. 160.

Three I.I.S.—Cranks 2, L.P. 20-inch, H.P. 14-inch, stroke 9-inch, revolutions 325, I.H.P. 222.

Two I.I.I.S.—Cranks 3, L.P. 20-inch, H.P. 14-inch, stroke 9-inch, revolutions 350, I.H.P. 360.

Steam pressure 150 lbs.

The cranks of the duplex engines are set opposite at 180 degrees, the triple at 120 degrees.

As these engines may be of interest to you, Messrs Willans have kindly sent me a sectional photograph of the small size G.G. (See Fig. 1, Plate X.) The engines are, as you will observe, single acting, with a receiver between the H.P. and L.P. The valve rod eccentric is placed in the centre of the crank. There are two connecting rods, one on either side of the valve rod. The piston rod is hollow and contains the steam ports. The valve rod works in the centre of the piston rod. The crosshead is contained in a trunk piston, which acts solely as a guide, and by means of which the pistons are cushioned on the up stroke. Air is admitted above this piston by the ports on the guide cylinder, this is compressed and expanded again on the stroke.

The steam, in the drawing, is being admitted, as indicated by the arrows, through the ports on the piston rod from the steam chest to the top of the H.P. piston, and from the under side of the H.P. cylinder to the top of the L.P. piston. The cut-off is governed by the height above the cylinder, to which the gland rings are raised by the distance pieces placed beneath them. In the up-stroke, the steam from the H.P. cylinder will pass to the under side of the piston, the H.P. cylinder thus acting as a steam chest for the L.P., the steam from the L.P. passing to the exhaust.

Dynamos.—The dynamos are two pole shunt wound with drum armatures. They are coupled direct to the engines, with a heavy disc to ensure steadiness in the running. The combined plant stands on one sole plate. The maximum output of the several dynamos is:—

Two	330	amperes,	140	volts,	92,400	watts.
Two	400	„	230	„	184,000	„
Three	670	„	230	„	462,300	„
Two	980	„	230	„	451,200	„

making a total of 1,189,900 or 1,190 units.

The absolute necessity of working without making any smoke has led to the use of gas coke, obtained from the Corporation Gas Works. At a preliminary trial on one boiler, in April, 1893, when working with a very light load, the water evaporated was 27,458 lbs. in eight hours; 3770 lbs. of coke were used.

Mean boiler pressure, 149.
Mean feed temperature, 145°.
Evaporation per hour, 3,432 lbs.
Actual evaporation per lb. of coke, 7·28.
Reduced to standard, - - 8·13.

The value of this per unit generated was ·24.
The analysis of the coke showed:—

Moisture, - - -	10·68.
Ash, - - - -	10·16.
Loss on ignition, -	79·16.

Assuming this to be carbon, it gives 11,416 thermal units per lb.

The result of measurement in a calorimeter gave 11,286. It may therefore be taken that the evaporative value of this coke is 11·75 pounds of water under standard conditions.

These figures do not take account of the coke used at night when no work is being done. The trial only lasted for eight hours. An extended test was made by Professor Kennedy on the 2nd and 3rd of November, when the following results were obtained:—

Total duration of experiments, - - - - -	hours,	48
„ Coke put on fires, - - - - - -	lbs.,	61,900
„ Coke used in boilers of which the stop valves were closed, - - - - - -	„	9,260
„ Nett coke used for steam, - - - - -	„	52,640
„ Water through meter, allowing for all differences of level, - - - - - -	„	378,970
„ Water used while station was shut down, -	„	16,296
„ Nett water used during running hours, - -	„	361,674
„ Electrical work at dynamo terminals, -	E.H.P. hours,	8,991

Total electrical work at Board of Trade units, or kilo-watt hours,	6,708
Pounds of water evaporated per lb. of coke put in fire, actual,	6·12
„ „ „ „ „ „ reduced to standard,	7·38
„ „ „ „ of nett coke, actual,	6·87
„ „ „ „ „ reduced to stand.	7·91
Ratio of stand by fuel to total fuel on fires,	14·96 per cent.
Pounds of water used per unit generated,	56·5
„ „ „ nett water only,	53·93
„ „ per E.H.P. hour,	42·14
„ „ „ nett water only,	40·2
Pounds of coke put on fires per unit generated,	9·23
„ nett coke used „	7·85
„ coke put on fires per E.H.P. hour,	6·88
„ nett coke used „	5·85
Total running hours during the two days,	33·75
Mean load during running time,	kilo-watts, 198·7
Maximum load,	„ 669·4
Ratio of mean to maximum load,	29·7 per cent.
Load factor per actual hours and engines,	68·4 „
Mean steam pressure, lbs. per sq. inch above atmosphere,	151·5

The accompanying diagram (see Fig. 2, Plate X.) shows you in a graphic form the results of these two days' trial. The total coke put on the fires was 61,900, but of this 9,260 was required to supply damped fires and condensation in the steam pipes through the night. The main steam pipe is always under steam for the sake of the joints. The ratio of 14·96 per cent. between these figures is rather high; the water consumption is much too high. These figures will be improved, faulty traps and drain cocks being responsible for much of the loss.

The engines and dynamos combined show an excellent efficiency. I have put the efficiency curves of these engines above (Fig. 3, Plate X. and Fig. 4, Plate XI.) These were taken by Prof. Kennedy at Thames

Ditton before delivery here. The curves for the last large set were thought to be too good to be correct, being 88 per cent. for the combined plant at full load, a loss of only 12 per cent. between the I.H.P. on the engine and the E.H.P. delivered at the terminals of the machine. Before accepting the results all the indicator springs were independently tested and found correct. The results were therefore accepted. The upper line on the diagram shows the consumption of water per I.H.P., which is very satisfactory, being 17·5 lbs. for every H.P. added after 40 I.H.P., which is required to drive the engine and dynamo. The under short curve shows the total water per H.P. hour. These curves show that with an engine load factor throughout the station of 50 per cent., or half load, an efficiency of 80 per cent. can be maintained in the generating plant. The indicator diagrams were taken from this engine (Fig. 5, Plate XI.).

Accumulators.—A set of accumulators is placed over the boiler house. This position keeps them in a suitable temperature; otherwise during the winter they would be affected by frost.

The set consists of 114 cells, 57 being placed between the negative wire and the middle, and 57 between the positive and middle. Each cell has 61 lead plates, with a capacity of 1000 ampere hours at 2 volts, with a discharge rate of 200. There are 6 cells as repair cells, or, as they are sometimes called, milkers. From these, plates are taken to replace faulty ones in the working set, and should a cell show any weakness it is not allowed to discharge for a day, but is short-circuited by two milkers in series. It has thus 4 volts across it.

I have had a diagramatic sketch prepared which I think will give you a better idea of the mode of charging and discharging than all the description I could possibly read to you (Fig. 6, Plate XI.).

The battery regulating switches are placed in the battery room, and controlled by bevelled gearing from the switchboard.

Distribution.—The distribution begins practically at the switch board. It is generated at from 210 to 230 volts, and is kept

constant at the feeding points at 205, or 102 on each side of the system. The balance is maintained in the station by means of two 100 volt machines. The difference in current between the two sides does not generally exceed 200 amperes at any load. Exceptional nights have been known, such as 650 amperes, when both machines had to be run on the one side.

I have put before you (Fig. 7, Plate XII.) curves showing one of the heaviest days, and one of last month, which shows a falling off. The load factor for these days is noted on each. This factor is the ratio between the total output and the possible total output if the plant were working full load for 24 hours.

I have also noted the ratio between the amperes of current applied for and the maximum output. In December it was 54·3, and February 37·1. The real efficiency of running is shown in the plant load factor, which in February was 68·5 per cent. It has been as high as 71 per cent. This factor is the ratio between the output and the possible output if the machines were run full load from the time each one is started till stopped. This is the percentage that tells on the costs of running, fuel water, oil, etc.

The lamp connections have progressed in a fairly steady curve, as you will observe (Fig. 8, Plate XII.). October has the largest number of applications. The maximum output has not reached more than 54 per cent. of the total lamps wired.

The underground work in the streets is, I presume, pretty well known to you. The copper strip is laid on porcelain insulators in iron culverts, which are water-tight. I do not mean that under a pressure they would keep out water, but owing to their construction, the lids overlapping the culverts, the ground in which they lie must be flooded before the water could rise high enough to enter through the seam. I have never known an instance of water in the culverts. Water does collect in the brick junction boxes, especially in Bath Street, and districts where we have heavy clay soil. Provision is made in all such for their thorough drainage. Where it is not possible to lay copper strip, indiarubber covered cables have been laid in cast-iron pipes.

In distributing by three wires a network of copper is laid down, as shown in the accompanying map (Fig. 9, Plate XIII.). There are, generally speaking, three wires on each side of the street, in some cases there are only two wires, positive and middle on one side, negative and middle on the other.

Where strip is laid, the positive is always next the building, and the negative always outside. Where cable, the positive is painted blue, middle white, and negative red. The entire network is connected together throughout the city, positive to positive, middle to middle, and negative to negative.

The current to this network is conveyed by means of what are termed feeders, these are marked green on the map, and are so constructed on their sectional area as, when fully loaded, to give an equal drop in the potential. There are only two conductors to each feeder, one positive and one negative.

The middle wire of the network, or distributing mains, as we call them, is brought back to the station from several points, and has a sectional area of 1 inch at the station.

The potential is maintained constant at the points where the feeders join the network; it is therefore necessary to raise and lower the potential at the station to compensate the rise and fall of the load. For this reason, no house connections are taken from the feeders. All are taken off the distributing mains.

As a rule, only two wires are taken into each consumer, either from the positive and middle, or negative and middle. Every care is taken to balance the two sides, that is to have as many lamps connected to the one side as the other. Not only in the number of lamps has this balance to be maintained, but also in the class of customer. Early shops must be balanced against early shops, and late against late, houses against houses, and clubs against clubs. Where a large quantity of current is required, we balance such a building in itself, and take three wires to the main switchboard, where the division is effected.

The joints, which are perhaps the most important in the cable mains, are all vulcanised, thus making them equal to new cable.

It may be interesting to you to learn that I have some of the indiarubber cable placed underground that was used by Messrs Mavor & Coulson overhead, and purchased by them five years ago. It seems as good, and tests as well as new cable.

Faults in the underground mains are easily found by means of a compass needle. The needle is placed on the faulty conductor and brought to be parallel with it by means of a strong directing magnet. The other conductor is flashed to earth, and the direction of the excess current due to the fault is noted. In this way it is easily traced. Nearly all the faults are caused by careless workmen. The last fault was in Renfield Street, on the middle wire, and was traced in half an hour.

There are now 382 consumers, who have applied for a current of 15,487 amperes, which represents roughly 46,460 eight C.P. 33 watt lamps, distributed somewhat as follows:—

	Shops.	Warehouses.	Offices.	Churches.	Private Houses.	Clubs, Hotels, and Theatres.
No.	242	21	91	3	12	13
Amperes,	7776	2680	3269	229	275	1258

I have endeavoured to lay before you in as concise a form as possible a description of the works and plant in use at the Corporation Electric Lighting Station. We have not had a year's run yet, and it is therefore impossible to give figures as to cost of production, etc.

The author would take this opportunity of stating that the successful issue of the winter's labour has been due, in a very great measure, to the working staff. They have spared no pains nor trouble. The work has been their first consideration. From the highest to the lowest all have worked well.

The PRESIDENT said it was rather difficult to discuss this paper adequately, bristling as it was with figures, but he hoped that some of the electrical experts present would start the discussion. The

mention of Professor Kennedy's name as Consulting Engineer to the Corporation Electric Lighting reminded him that the University of Glasgow had seen fit to confer upon him the degree of Doctor of Laws. He was one of their honorary members, and he thought it showed the discrimination with which their honorary members were selected.

Mr H. A. MAVOR said that although he considered the system adopted by the Corporation unsuitable for the work to be accomplished, he wished to compliment Mr Arnot on the successful starting of the Glasgow Electrical Station, and, watching critically the result of their work, he could do nothing else than say that it had been so far successful, and that the Corporation were giving the public a thoroughly satisfactory supply of electricity. The company with which he had been associated had the honour of applying for a provisional order before the Glasgow Corporation did so. In doing so they worked out a scheme for the lighting of Glasgow which differed very materially from the one now being carried out. The principal difference was that they considered that in attacking the problem of lighting the city, they must look at it not so much from the immediate position as from the probable future requirements of such a city as Glasgow. Now, that was a very large and difficult problem, and in making up their minds on the subject they devoted much care to the question, and used, as much as possible, the experience which had hitherto been gained upon this point. He regretted to say that Lord Kelvin diametrically differed from them, although he was their consulting engineer, as to the advisability of using high tension alternating currents. He would not attempt to discuss the reasons here, but he thought it was not difficult to see why the Glasgow Corporation were advised to adopt continuous currents in the circumstances in which they were placed. As Mr Arnot had pointed out, the Corporation allowed a very large amount of the two years allowed by the Board of Trade to elapse before they took any steps in the matter at all, and it had to be admitted by the most ardent advocates of the alternating current system that it was not then so well developed as the continuous

current systems for application to public lighting. A very large amount of work had been done by the Glasgow Corporation on a system almost precisely similar to that adopted in America by the Edison Illuminating Company. They had done an amount of work which was enormously greater than anything done in alternating currents, and the experience gained handicapped the alternating currents in the race, because they were later in coming on the field; but in these days he thought no one would venture to dispute that the high tension alternating current was making its way forward, and that the engineers who had the necessary experience to enable them to compare it with low tension continuous currents thought that the day was not very far distant when no one would hesitate to use high tension alternating currents in districts which were so eminently suited for such an application as the district which the Glasgow Corporation had undertaken to light. He thought it would be evident to all engineers present that there was something wrong, when the Glasgow Corporation, having undertaken to light not only the compulsory area (which is really all they had been compelled to consider up to this time), but the whole Royal Burgh of Glasgow, already in their first winter, had nine separate engines running in the station. Not only that, but the station, as at present constituted, could not be very much increased in size. The answer to that was, that another one would be started, and that it was better not to have too many eggs in one basket. Various other reasons which had a certain amount of cogency were pleaded in excuse. There was a limit to the size of stations, it was true, but there was also a limit to the possibility of starting electrical factories all over a city like Glasgow, and it seemed reasonable to suppose that in lighting a city like Glasgow, they should look to the experience of gas distribution as a guide to what they might do with electricity. He contended that there should be as many stations for electric lighting as gas works at present, because the problem was the same. He hoped at next meeting to bring forward some considerations which might interest the Institution with regard to some of the points Mr Arnot had mentioned, especially with respect to the load

curves, and to the efficiency of the engines. These were very interesting points indeed, and after all were the centre of the matter. It would be evident to any one who looked at those curves that to use steam engines, or any other source of power, for the production of electric lighting was not an economical thing to do, and all that could be done, as Mr Arnot had pointed out, was to run the engines at full load for only a very short period of their existence. The rest of the time they were standing idle and doing nothing. That was a kind of industry which was not a paying one, and therefore strenuous efforts had been made to find some means of storing the work of the engines so as to apply it to the circuit when the load curves reached that very high peak which occurred during the greater part of the winter between five and six o'clock in the evening. The attempt to do that had been so far unsuccessful. The use of accumulators was indicated in that diagram by the blue lines, and they would see how very small a part they played in the operation of the station. It was totally insignificant as compared with the work done by the engines, and, although they were useful in their way, he thought that on the whole the practice adopted in America would be followed in this country, and that batteries would not be used in lighting stations. There were some other points that he would beg respectfully to differ with Professor Kennedy upon in his arrangement of the switchboard. It seemed to him that his arrangements of the switchboard were very complicated—it seemed to him partly owing to the use of batteries, which led to more complication than was warranted by their use in working. Perhaps Mr Arnot would be good enough to say what was the maximum loss in the feeders. He mentioned that under certain circumstances it was 25 volts or 12½ per cent., or thereby. Now, that was another matter which meant a considerable amount of complication on the switchboard. If there was a loss of 12½ per cent. between the generating plant and the most distant part of the system, that loss had got to be compensated for in the engine-room, and as the loss varied with the load the compensation would vary, and that necessitated constant watchfulness on the part of the attendant, and was one of the

reasons why the continuous system was more difficult to work than the alternating current system. As to question of the relative cost of high and low tension systems, this was a battle that had yet to be fought out, and had to be won by one side or another. There were many cases where continuous currents had a superiority over alternating currents, but the case in question was, in his opinion, not one of these. The published figures of relative costs of lighting stations were interesting in this way—they proved that the first cost of an installation of continuous currents was greater than the first cost of alternating currents per lamp, but that the cost of working the continuous system was less than that of working the alternate current system per unit, and in balancing these two it was very difficult indeed for the most ardent partisan of either system to find very much to say on the question of economy, so that the thing resolved itself into a matter of convenience; and, fortunately, now-a-days there was plenty of opportunity for gaining the experience that would determine which was the more practically convenient. There was an element in this question which was specially interesting to Clyde engineers. Professor Biles, in his paper, recently read to this Institution, pointed out that there was a possible limit to the size and speed of ocean steamers. It therefore might come to be a question whether the Clyde engineers might not take up the construction of large land engines on marine lines. This had already been done to some extent, and it might be interesting to Clyde engineers to know that experience showed that the use of alternating current tended to increase the size of the engines used. The Waterloo Street station was a very good object lesson on this point. There were already nine engines in this station, producing a total horse power of something under 2000, whereas the speaker thought that it was not too much to expect that the lighting of a city like Glasgow would ultimately give employment to engines of such powers as 10,000 horse, rather than the small units now employed.

Professor JAMIESON said he hoped to discuss this paper at next meeting after it had been printed. Mr Mavor had, however,

brought forward a little of the history of this installation, and consequently it might not be out of place to say that he (Professor Jamieson) was consulted by the Glasgow Corporation Electric Light Committee, and had many meetings with them before Lord Kelvin was called in and approved of the advice which he had given—viz., that under the peculiar circumstances in which they were placed (with a dense but limited compulsory area), and seeing that they had so little time to plan, erect, and equip a central station, they should go in for the safe and sure system which Mr Arnot had described to them that evening. He did not agree with Mr Mavor on many points, and especially that part where he said that they should have great big engines working at one big centre. He believed rather in using comparatively small engines, and consequently in being able to put in or take out power as the public demanded the same. He complimented the author for having brought his paper before their society, for the members evidently took a great interest in such matters, and it was likely to bring out a lively and useful discussion.

Mr BIGGART said they were all interested in such a paper as the one now read, but some were more interested from the point of view of that of the consumer than that of the producer, and he thought Mr Arnot had not given much information with regard to the cost of electrical lighting as compared with that of gas. Now he believed there were many who would be consumers if they could see that the light could be supplied at a moderate rate. He had heard estimates outside of what the cost was as compared with the gas light, and some of these stated the gas was only one-third of the cost of the electrical light. Perhaps Mr Arnot would be able to confirm or contradict that next evening.

The discussion was then adjourned till next meeting.

The discussion of this paper was resumed on 24th April, 1894.

Mr M'WHIRTER said he must congratulate the Institution on the paper put before them by Mr Arnot. It had thrown a great deal of

light on the installation of electric lighting in Glasgow. Mr Arnot had given sufficient information to those who were able to follow the paper to desire more light. Some parts of it were very clear, but the very parts—speaking for himself—that he was most in the dark about were the parts that were not so fully explained as they might have been. He trusted that Mr Arnot, in his reply to the discussion, would make a large addition to what he had already put before them. Mr Mavor differed very strongly with the Glasgow Corporation for the system of electric lighting they had adopted. That was only to be expected. He was satisfied that they had, so far, adopted the right system, but he could not see how it was they adopted the absurd voltage of 200. Certainly it would have been much better had they adopted 220 or 230 volts. There would have been a gain of 10 or 12 per cent. in the distribution of current, and there would also have been a very great gain in the working of arc lamps from the system of electric lighting. It was a well known fact that 100 volts was altogether too neat for working the arc lamps that they had at their command at the present time, but even 100 volts could not always be got. He found the voltage recently to vary more than 4 volts, so that when they took that off it was quite sufficient to cause the lamps to feed when they really ought not to have done so. He thought it a very great pity, indeed, that 100 volts should have been adopted. That was, 200 volts between the outside mains. On the question of efficiency he had no doubt at all the Glasgow installation showed very well, a compound efficiency between the engine and dynamo of 88 per cent. commercial, and 17·5 lbs. of water per horse power, which was all that one could desire. They could point to very few cases of the transformation of energy where anything approaching this was done. If they had adopted the alternating system he did not think they would have got an efficiency exceeding 66 per cent., or something like that, so that here there was a clear gain of 20 per cent. in conversion. There might be, however, as was mentioned by Mr Mavor at the last meeting, a considerable loss in the distribution as compared with the alternating system. Coming down to the question of

accumulators, he could not say that he approved of the adoption of these in their present capacity in Glasgow. They were only able to carry on the lighting for a very short period of the twenty-four hours. He did not happen to know what the cost of these cells was, but he thought it would reach something like £2000, and if they took that £2000 at 13 per cent., which he thought would soon be required, although they were told by the makers and others at present that the maintenance charges was practically nil; yet those who have had accumulators know that 13 per cent. is nearer the cost of maintenance than anything under it. (Mr Mavor—30 per cent. is nearer it.) He had no doubt at all that the introduction of accumulators in this system was done with the view of saving money, but if they took £260 he was quite certain it would do more than fill up the interval over which the accumulators carried on the lighting by direct working. Of course there was another thing to add to that. From the accumulators not more than 85 per cent. efficiency was got, so there was another 15 per cent. gone there. Mr Arnot called attention to a system of keeping the cells in good order, where he said at page 151—"There are six cells as repair cells, or, as they are sometimes called, milkers. From these plates are taken to replace faulty ones in the working set, and should a cell show any weakness it is not allowed to discharge for a day, but is short-circuited by two milkers in series. It has thus 4 volts across it." He was assuming that the faulty cell had got a back E.M.F. of 2½ volts. That was, they had 1½ volts tending to send a current through that cell. Assuming for the sake of argument that the resistance of the cell was only ·001, or something less than that, it appeared to him they would have something like 1500 amperes going into the faulty cell. Perhaps there was some other arrangement, and, if so, they would be glad to know something about it. About the underground main Mr Arnot did not say very much. Mr Arnot said nothing about the insulation of those mains, but perhaps he would kindly give them that. Speaking as a telegraph engineer, he never saw such an attempt at insulation as in Glasgow. He did not think the resistance in ohms exceeded

three figures. That being so, there was something going on continually that some day would be very serious. Supposing the resistance were taken at 300 ohms, that would mean, with 200 volts, an ampere of current loss. If they had an ampere of current going to waste it meant 18 grains of copper being removed from the positive conductor every hour, or something like an ounce of copper per day. How long was that going to continue before there was anything very serious? The installation of the underground mains was very far from what it might have been. Mr Arnot gave them very little information about feeders. The system of feeders enabled the potential to be kept constant all over the system. There were several ways that could be done. It could be done by connecting a dynamo between every pair of feeders. If that was done, unless there were a number of places where the amount of current carried by the feeders was identical, and the resistances were identical, so that the potential at these places should be the same, then one dynamo must be run for each pair of feeders. Another way was to introduce resistance into the feeders, which meant loss. A better way, and a purpose for which he thought accumulators were admirably adapted, was to bring about this regulation by the use of accumulators, inserting, withdrawing, or reversing as required. This last was economical, and did the work exceedingly well. Mr Arnot stated that they had decided in Glasgow to paint the negative red, and he gave them his reason that it was because there was a paper used for pole finding, which, when touched by the negative pole or wire, there was a red mark produced. He had been looking into that, and had a lot of papers giving red, blue, brown or green, and it was difficult to see why an installation like Glasgow should have changed what had been use and wont for many years—*i.e.*, the positive conductor had always been painted red since ever there were any distinguishing marks used, so why it should be changed and the negative made red, the actual reverse, for such a simple thing as the colour produced by a pole-finding paper, was something beyond his knowledge. He thought when they had a system which had been carried out

practically all over the world, that there should be some solid ground to bring about such a change. There was another interesting matter which Mr Biggart brought up at the last discussion. That was the question of cost. Unfortunately Mr Arnot had not run the station a year, and until that time they could not get it, but they hoped to get it in another paper, and he might then let them know the profits the Corporation were making. The present charge, he believed, was 7d per unit, or, if compared with gas, it was something like gas at 7s per 1000 feet. That meant that those who used electric lighting must consider it a luxury, but, of course, there were certain benefits which reduced this price. For example, there was less painting and cleaning, and the lights were not required to be always burning, and when these things were taken into account and compared with gas it was something like at the rate of 5s per 1000 cubic feet. When they kept in mind that there was a company in Newcastle supplying electricity at 4½d per unit, and paying a dividend of about 5 per cent., and who had actually been paying a dividend over the whole period of their existence at the rate of 4 per cent., there was certainly something that the electrical committee of the city of Glasgow required looking into, and in support of that, in Bradford, where the conditions were almost identical to what they were in Glasgow, the cost of production was only 2·57d per unit; and in Glasgow, without going to Bradford or Newcastle, there were many instances where gas engines were supplying a unit of electrical energy with a consumption of 30 feet of gas, or, say, a penny per unit, so that there was something wrong with the system, or the public of Glasgow were being very much overcharged—perhaps a little of both. He certainly could not see that there was any inducement to any one requiring much lighting to take power from the Corporation mains so long as the price was anything approaching the amount being charged now, when they could get a gas engine to give them the same at much less cost. They knew how little attention a gas engine required, and the cost of the engine, interest, and depreciation was easily ascertained, and added

to the penny per hour would certainly make a very small item.

Mr H. A. MAVOR said that since last meeting he had come to the conclusion that a discussion of this sort was not long enough to enter into the whole question, and he would confine himself to the discussion of the station as it stood, and perhaps his other remarks might be embodied in a paper which he might read next session. In the discussion at last meeting he stated that he might look forward to engines of 10,000 horse power being used. He was trusting to his recollection for figures. 10,000 H.P. was about the size of a generating station suitable for one district of Glasgow, so that, of course, the individual engines would be much smaller. Coming now to the station as it stood in Waterloo Street, the first striking difficulty that appeared to one was what led the Corporation and its engineers to place the station there. Every ounce of coal had got to be carted to the place; there was no water available for the condensers; the ground was dear, and it was by no means in the centre of the district which was to be supplied. The next peculiarity was the size of the unit, that was to say the size of the individual dynamos that were laid down for the work. The station had about 1862 horse power, and it was proposed to increase this to about 3000. Mr Arnot had shown that engines of the type used would run economically at half load, so that there was no economy in having engines in a smaller ratio of relative size than $\frac{1}{2}$, that was to say that when the smaller engine was fully loaded up, No. 2 might start to run efficiently where No. 1 left off. Examining the existing plant on this basis it would be found (the balancing dynamos being left out of account because of their adaptability for very light loads) that the second existing plant bore a ratio to the third of $1 \cdot \frac{1}{45}$, and the second to the largest of $\frac{1}{2 \cdot 5}$, which would be quite a fair ratio. Therefore, all the arrangement of intermediate sizes, and the resulting complication of steam pipes, wires, switches, etc., was unnecessary. The arrangement of the station for 3000 lights on the lines which Mr Arnot's paper clearly proved might have been adopted with perfect economy, should stand as follows:—Taking

the balancing dynamos and engines as they stood, the second engine would have been 300 horse power instead of 160 as it was now. The third engine would be double that size, or about 600 horse power. To double that engine would lead to another difficulty. It was advisable in a lighting station to so arrange that the breakdown of any one plant should not interrupt the efficient working. It might be assumed that if the station was well designed, and the engines were working easily at their full normal load, it would be a safe thing to overload these engines by 30 per cent. In fact, for a short time a good dynamo might be worked at double its normal load, as might be seen from the load curves. The time of the full load was only a quarter of an hour during the whole year, and therefore the risk of having to run the plant 30 per cent. overloaded for a quarter of an hour was not a serious risk. The size of the units would, by this consideration, be limited to about 700 horse power, and that might be taken for the purpose of this argument, as the limit to the size of an engine in a station of 3000 horse power. Argued out in that way, there would be for the 3000 horse power four large engines, one small one, and two little balancing engines, or seven engines in all of three different sizes. What had been done in the Glasgow Corporation station? There were thirteen engines in the complete plan; the biggest one was 350 horse power, and the engine-room was like a toy shop. From the load curve on the 26th of December, which was about the date of the heaviest curve in the year, it would be seen how rapidly the load runs up from about one-fourth of the output of the station right up to the top inside of an hour. Now, the trouble that was involved in the starting of no less than twelve engines between the top and bottom of that load might be imagined, and it seemed a manifest absurdity that this trouble should be incurred. There were still three engines of 350 horse power each proposed to go down, and he hoped the Corporation would be persuaded to put down as big engines as the place would hold, and abandon this duplication of ridiculously small units. Four years ago on a visit to New York he had occasion to call attention to what seemed to be a similar mistake

which was being made by the Edison Illuminating Company. They were arranging a new station which was now the Elm Street station, and they proposed to proceed with 600 horse power units, which were just as small in proportion to the size of their works as the units here were, in fact smaller. Very strong representations were made to them, and these were successful so far as to be an element in the considerations which induced that company to send their chief engineer to visit this country. He spent some time on this side, visiting London and the Continent, and when he went back he increased the size of the units—although, in the speaker's opinion, they were still too small, and before the station was complete probably the size of the later engines would be increased. For the Elm Street station as it stood it was proposed to use ten engines of 2000 horse power each. Returning to Waterloo Street, there was no necessity for having any main engine smaller than 630 horse power, but as a concession to risk of break down one of 300 horse power might be admitted. A great delusion in possession of the minds of many electric engineers was that it was necessary, even at large capital cost, to save the last ounce of coal in a generating station. It was good to work economically, but it must not be done at too great a cost. Probably it was with a view to economy that so small units were used, but it was carried to an absurd extreme. The cost of the station as it now stood had been, he estimated, from £2500 to £3000 more than it would have been if engines of the size spoken of had been put in. It was difficult to see what argument could be found for the use of such small units, unless it were what must be after all a fairly strong argument, that the biggest engine in the Glasgow station was the biggest engine of the type which had been manufactured at that time by Willans & Co.; that might have been fair excuse in the circumstances under which the Glasgow Corporation were placed. They had to get quick delivery of the engines, and were obliged to buy them from a maker who could take the pieces out of stock. Willans & Co. were able to do this. Looking to the large area still to be lighted, he thought it would only be fair to ask the Corporation to begin their arrangements in time to enable them

to ask Clyde engineers to offer for the next engines, and give them time to make them. On the question of storage batteries he had tabulated a debtor and creditor account, with blanks for Mr Arnot to fill up, and he hoped he would do so.

There was on the debit side—	On the credit side—
Sinking fund or cost.	Coal and attendance saved.
Rent or charge for space.	
Attendance.	
Repairs and up-keep.	
Loss of energy in difference between charge and discharge at 1d per unit.	

He thought that although it would be interesting to have those figures, it was perhaps hardly fair to ask for them, because the money would probably be all on the one side. He did not think anything could be shown for storage batteries on the credit side of the account. It was no doubt a great help to the engineer to have storage, because it enabled him to shut down and make repairs on steam pipes, etc., and upon this no definite money value could be put; but he maintained that that could be as well done in the Glasgow station by having a 100 horse power gas engine, or a turbine driven by water power from the hydraulic mains at high pressure, either of which would be as convenient as a storage battery. He had the pleasure of seeing in Antwerp such an hydraulic arrangement, and nothing could be more simple, and, probably, the cost would be much less than that of storage batteries. He did not think it would be fair to charge the Glasgow Corporation with all the unfortunate difficulties that Mr M'Whirter had referred to as having taken place in the underground mains, still he could not help thinking that the system of iron culverts and bare wires would, even with the best workmanship, be unsatisfactory; and, in view of the probability of putting the middle wire to earth, this method was almost certain to be abandoned in favour of some more trustworthy and safe system of running underground

wires. He said he was anxious that his arguments on large engines should have some effect, and, therefore, that they should not be misunderstood. He did not propose that the station should be run by two engines. It would be quite clear that his argument had two elements—first, that there is no economy in having in an engine less than twice the size of its predecessor; and, second, that the size of the engine is limited to one-fourth of the total output of the station. With these two arrangements they had provision for economy and provision against break downs.

Mr S. MAVOR said he thought the wisdom of the choice of engines was open to question. Engines of this type had certainly given very satisfactory results in the matter of economy, but the records of their use for central station purposes extended over a comparatively short period. The conditions experienced by electric lighting engines on board ship were often exceptionally severe, but the fact was that double-acting engines by many well-known makers had successfully withstood these conditions, while engines of the type in question had succumbed. The faults which developed rapidly under severe conditions would probably also develope in longer time under more favourable conditions. His own experience of the Willans engine in the smaller sizes had been extremely satisfactory; but he believed that central station engines of the marine type, of which there were so many examples at work on the Continent at speeds of about 120 revolutions per minute, would still be doing hard work after the engines in the Glasgow Central Station were used up. With regard to the battery, he failed to see why a battery should have been used in Waterloo Street, especially bearing in mind the fact that the arc lamp plant was also put in Waterloo Street. The primary use of the battery in such a case appeared to be to allow the boilers to be shut down and to save a shift of men, but in Waterloo Street there was the necessity for it to be run every night and all night. The battery certainly was a decided convenience in switching the load off and on when adding on or taking off a dynamo, but the cost and complication seemed to be quite unwarranted by the very slight gain which it could show

in this case. With regard to the mains, if Mr Arnot had not too much to reply to, he would like if he would, in giving the information as to the mains, give them the insulation of each wire. He had heard from some of the other three wire stations that they found a difficulty with the negative conductor. The negative wire was said to go to earth, but that if the wires were changed round and the negative made the positive and the positive made the negative wire, the wire which was positive would go to earth and the negative come up. Mr Arnot might give the result of his experience with regard to this phenomenon. With regard to Mr M'Whirter's remarks about producing electricity by a gas engine, it was rather absurd to say that a man having a hundred lights would be better to have a gas engine of his own. It was a matter of the number of hours during which these lamps were used. If he had a hundred lamps and wished to use them for a hundred hours per annum only he had to spread his £300 over the hundred hours, and the cost would be out of proportion when the number of hours each lamp was in use came to six hundred hours per annum. Then it came to be a question of whether it was cheaper to use a gas engine for generating on the premises or taking a supply from the Corporation, and herein lay a very important question which the Corporation would have to face. It meant that those consumers who used the lamps for over six hundred hours per annum were the best paying customers, and unless the Corporation would bring down the price below 7d per unit the Corporation would lose those customers. It also meant that in a large warehouse consumers would put down plants sufficient to do the portion of lighting which it would pay them to do, and they thus not only deprived the Corporation of all the paying portion of the lighting, but they switched on to the Corporation mains the portion which it would not pay them to do, and certainly would not pay the Corporation.

Mr RANKIN KENNEDY, in a written contribution, stated that he thought the site chosen for the generating station most unsuitable. It should be a first requisite in choosing a site that it be either on a railway siding, on a river bank, or canal, for convenience of carriage.

He also thought that the system adopted was not the best for a city like Glasgow. It was contended that it was the best for the area for which it was designed; that, however, was a moot point, but was not now worth discussing. The low pressure continuous current system adopted could not in the future be extended to other parts of the city, and even if it could the site chosen was not fit for a larger station. That the low pressure continuous current system was unfit for extensive supply was admitted practically by the designer of the Glasgow station, and was proved by the fact that he had advised a mixed system for Edinburgh—a combined continuous current and alternating current system. The remarks of Mr Mavor in regard to the steam engines used he fully endorsed. In the United States the necessity for large well-designed engines was now recognised, and on the continent of Europe large marine engines were now adopted. In London and in some other places the electric lighting was in the hands of companies; in Glasgow and other places it was in the hands of corporations; this fact made a difference apparent to any engineer who could make an estimate of the value of machinery and electrical plant. The corporation plants were pretty much stereotyped copies of one another, and ran up to a large initial cost per lamp capacity—the companies seemed to get much more for their outlay. As the paper was a descriptive one only, it could not afford much room for discussion. The practice at the station was quite orthodox, and might be expected to give the usual results common with such well-known machinery, and some few years must elapse before it could be criticised on actual results of its working. The proposal to put down similar stations when electricity was required in other districts, was not likely ever to be put in practice; by the time these were necessary it was to be hoped that better counsel would prevail. The large central station, like the gas works, was the station of the future, distributing at high pressure to the various districts.

Professor JAMIESON said the first thing that attracted attention in Mr Arnot's paper was the want of uniformity in describing the plant. For example, he mentioned the names of the makers

of such simple matters as steam-pumps and feed-water heaters, but omitted the names of those who had constructed the boilers, dynamos, etc. Moreover, he had given but a very imperfect idea of the general arrangement of the central station. If the statements at the foot of p. 147 regarding the number and sizes of the engines employed had been neatly tabulated, they should have been better able to follow Mr Henry Mavor in his remarks about the size of the units employed, to which he took such vigorous exception. Both the wall diagram and figure 6 of Plate XI., showing the "switch-board connections," were so unconventional and complicated, that he was certain very few of those present would take the trouble to try and comprehend them. He had therefore prepared what might be termed an "Educational Diagram." When this was compared with its corresponding "Index to Parts," there would be no difficulty in grasping the leading principle of the whole arrangement. The great advantage of depicting complicated electrical connections in this way was very apparent.

Diagram to illustrate Professor Jamieson's remarks.

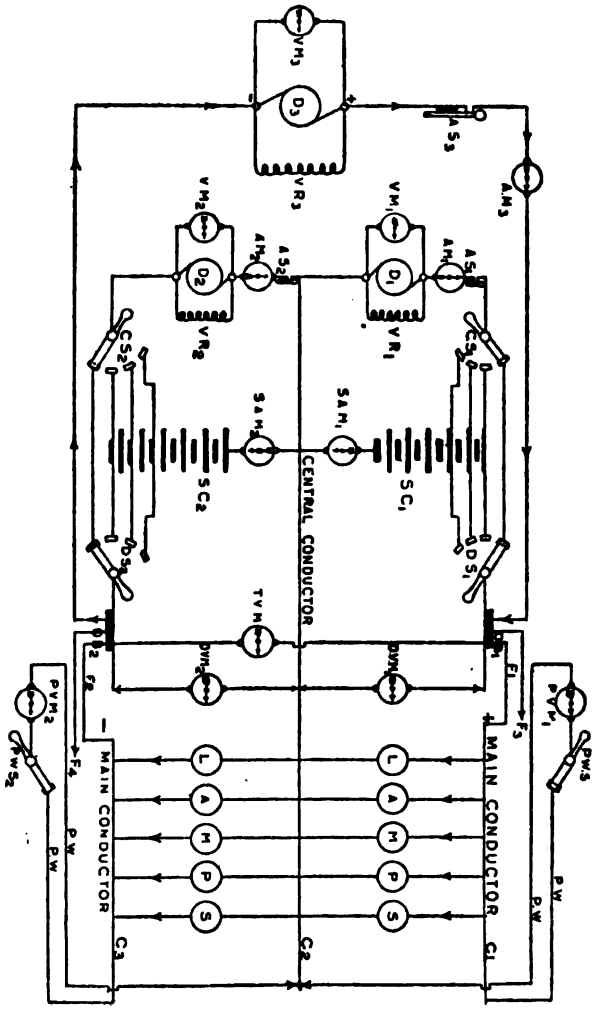

Index to Parts—

$D_{1 \text{ and } 2}$ for Dynamos (140 volts).	$SAM_{1,2}$ for Storage Ammeters.
$D_{3, \text{ etc.}}$ „ Dynamos (230 volts).	$DVM_{1,2}$ „ Discharging Voltmeters.
$VR_{1,2,3}$ „ Variable Resistances and shunt coils.	TVM „ Total Voltmeters.
$AS_{1,2,3}$ „ Automatic Switches.	$OB_{1,2}$ „ Omnibus Bars.
$VM_{1,2,3}$ „ Voltmeters.	PW „ Pilot Wires.
$AM_{1,2,3}$ „ Ammeters.	$PWS_{1,2}$ „ Pilot Wire Switches.
$SC_{1,2}$ „ Storage Cells.	$PVM_{1,2}$ „ Pilot Voltmeters.
$CS_{1,2}$ „ Charging Switches.	$C_{1,2,3}$ „ Cables.
$DS_{1,2}$ „ Discharging Switches.	$F_{1,2,3}$ „ Feeders to Cables.

In the first place, they had the large 230-volt dynamos (mentioned on page 148) represented in the above figure by D_3. They were connected directly to the omnibus bars, OB and OB_2. In the second place, they had the two smaller 140-volt dynamos connected to the storage cells S C_1, S C_2. By means of the charging and discharging switches, the whole or requisite fewer number of cells might be charged and discharged so as to keep the incoming and outgoing potentials at their proper values. In the third place, they had the three wire system of main conductors C_1, C_2, C_3, with their necessary (+) and (—) "feeders." In the fourth place, they had the potential voltmeters, switches, and wires, by which they were enabled to ascertain the pressure at various places throughout the system. Finally, they had the necessary volt and ammeters connected to the respective dynamos and batteries. Mr Arnot had given a minimum amount of information regarding the insulation and general behaviour of the main conductors and their feeders. They should like to learn from him (1) what was the lowest safe working insulation resistance of the whole system at any particular time? (2) what proportion of the whole current was lost by leakage in the mains? (3) what was the proportion of the power generated to that paid for by consumers? He mentioned an interesting and novel method of fault-finding without informing them who devised the same, or how near a fault could be "spotted" thereby as com-

pared with other methods. His remarks on this subject would have been better understood if they had been accompanied by a diagram. He (Professor Jamieson) held very different views from those expressed by Mr Henry Mavor in regard to the size of the units into which a central station should be divided. In the first place, the greatest economy resulted when engines and dynamos were worked at full load. Consequently, it was most advisable, to be able to increase or reduce the amount of the plant in action at any time, so as to correspond as nearly as possible with the public demand for current. If the central station contained but two large slow-speed engines and alternators, each capable of bearing the maximum load, they should not only have a needlessly large percentage of spare plant, but the working of the machinery would be at a very low average output, and consequently at a low efficiency. Further, it was preferable to adopt high-speed direct-coupled engines to slow-speed belted engines; for, if the latter were employed, they must syncronise not only the alternators but also the engines. The extension of the Glasgow Central Station could be best carried out by placing suitable gas engines and dynamos at several points on the circumference of the system. Whenever those in charge at these outlying sub-stations observed the pressure falling below the normal, they could start their plants in a minimum of time, and thus help the central station to meet the demand. Mr Biggart had asked a very pertinent question, viz.: what was the relative cost of gas and electric lighting? He was of the opinion that Mr M'Whirter's reply to this question was too favourable to the latter. For, with Glasgow gas at 2s 6d per 1000 cubic feet, and electricity at 7d per Board of Trade unit, it only required simple proportion to prove that candle for candle they were being charged at the rate of 9s 5d per 1000 cubic feet of gas for their electric light.* But is the supply

---

* For, 5 cubic feet of gas per hour gives a light of 20 C.P., ∴ they had $1000 \div 5 = 200$ hours of lighting for each 20 C.P. burner, or 200 hours × 20 C.P. = 4000 candle-hours for 30 pence. But an average 16 C.P. Edi-swan electric lamp requires 65 watts, ∴ 1000 watt-hours or 1 Board of Trade unit will

of electric light at this price paying the Corporation? Suppose that the whole capital hitherto expended by the Corporation amounted to £120,000. They paid 3 per cent. for the loan of this money, and 7 per cent. could not be said to be too much for depreciation, so that they had 10 per cent. of £120,000 to lay past annually as a *first* charge. Now, their income from the supply of current for public and private lighting certainly did not amount to more than £15,000, thus leaving less than £3000 per annum to pay the staff and run the two stations! Consequently if they were not making a profit at 7d per Board of Trade unit, they must wait a little before clamouring for a reduction.

Mr ARNOT said he had to thank them for the very appreciable way in which they had received the paper which he had the privilege to read. Replying, he said, Mr M'Whirter asked the question—why adopt the 200 volt pressure? The reason that pressure was adopted was the circumstance that 5000 lamps were already being supplied at 100 volts. The Corporation had to maintain that supply, and if they had altered the voltage they would have had to supply lamp renewals to these customers. Reference was made to a case in which the voltage was low in a certain part of the town. The reason of that, he said, was due to the works which are being carried out in Argyle Street by the Caledonian Railway. The feeder could not be laid as intended. As a consequence the distributing main had to be increased, and acted as a feeder for a time; the rise and fall in the voltage was due to this cause, as the potential of 100 was kept constant at the far end of the distributing main. The feeder had now been completed. There was a case lately at one part of the town where a consumer complained of the voltage being low. When inquired into, it was found at that particular spot the balance was not right. The connection

---

light 15·4 lamps for 1 hour. Or, $15{\cdot}4 \times 16 = 246{\cdot}4$ candle-hours for 7d. $\therefore$ If x = equivalent price of gas per 1000 cubic feet, we have, by proportion,

$$246{\cdot}4 : 4000 :: 7 : x, \therefore x = 28{,}000 \div 246 = 113 \text{ pence} = 9\text{s } 5\text{d}.$$

Or, the present cost of the electric light in Glasgow is 3·76 times the price of gas at 2s 6d per 1000 cubic feet.

was made on the other side, the balance restored, and all cause of complaint removed. Why was the negative painted red? He did not make the negative red, nor did he suggest the negative to be made red. It was red in London before it came here. It was a matter of no importance whether it was red, green, or scarlet. The consulting engineer brought it to Glasgow; that was how it was adopted. Referring to the feeders, he said they were not regulated by different rheostats nor by separate dynamos on each feeder. A single dynamo could be put on any individual feeder. It had never been found necessary to raise the potential of any of the feeders above the others. All had been run from the common omnibus bar. The copper resistance of the feeders was calculated and adjusted to a certain load. The net work for the distribution being continuous throughout the city, he found the load equalised itself, and the potential was quite easily maintained constant at the different feeding points. He had not found the difficulties spoken of, and he was quite confident that when the difficulties did come the staff would be able to cope with them. The insulation of the main was an important matter. On Sunday afternoon, at 3 o'clock, he measured the outgoing current on a Kelvin balance. He sent the current out on one feeder, disconnecting all the others; the readings were—on the positive, 8 amp., on the negative side, 17·9 amp. He knew there were lights in the Post Office, in a number of jewellers' shops, and other places, they burned a pilot light constantly, and there were lights in the kitchens and underground offices of such places as clubs, and in the lighting stations there were a few lights. On that same Sunday the insulation resistance of the street mains, with all the work on consumers' premises attached—it was found that few broke their main switch—on the positive side was 860 ohms to earth; the middle wire was 710 ohms to earth, and the negative side was 70 ohms. It was the case that the negative side got gradually lower, but it was not a dead earth. On connecting a very low resistance ampere gauge between the positive wire and earth the current was to-day 1·5 amperes. Referring to Prof. Jamieson's remarks on the switch board, he said perhaps there were

too many connections and too many wires shown, but he purposely did that that they might have a correct drawing in the Transactions that they could study at their leisure, and if it was not understood now it would be at a future date.

The PRESIDENT said Mr Arnot had given a very important paper, and the discussion had been very interesting. This year a great variety of subjects had been brought before the Institution, and of these the subject of Mr Arnot's paper had been one which only a few of their number had been able to thoroughly discuss. Such a scheme as the electric lighting of the city was still in its infancy, and perhaps it might have been as well, on the whole, if its inception had been delayed a year or two, so that the mistakes which the Corporation were ready to commit might have been avoided. He hoped every Magistrate and Town Councillor would obtain a copy of the reports of these meetings, and that, before any further extension of the lighting scheme was decided upon, the specifications and plans would be laid before this Institution to be discussed, so that the Corporation might obtain an authoritative decision as to how they ought to proceed. He proposed that the Institution should give Mr Arnot a hearty vote of thanks for his paper. Mr Andrew Wilson was to have exhibited a model of an apparatus for lessening the rolling motion in seagoing vessels, but as it was too late it would require to be postponed to the next meeting. He had now to announce that the session had closed, and he hoped next season would find them all in health and strength.

The vote of thanks to Mr Arnot was heartily accorded.

THE JAMES WATT ANNIVERSARY DINNER was held on Saturday, the 20th January, 1894, in the Windsor Hotel, St. Vincent Street. Mr DAVID J. DUNLOP, Engineer and Shipbuilder, Port-Glasgow, occupied the chair.

Institution of Engineers and Shipbuilders
IN SCOTLAND
(INCORPORATED).

THIRTY-SEVENTH SESSION, 1893-94.

MINUTES OF PROCEEDINGS.

THE FIRST GENERAL MEETING of the THIRTY-SEVENTH SESSION of the Institution was held in the Hall of the Institution, on Tuesday, the 24th October, 1893, at 8 P.M.

Mr JOHN INGLIS, President, in the Chair.

The Minutes of Annual General Meeting of 25th April, 1893, and of Adjourned General Meeting of 2nd May, 1893, were read and approved, and signed by the President.

The PRESIDENT delivered his Inaugural Address. On the motion of Mr ROBERT DUNDAS, Past President, a hearty vote of thanks was awarded the President for his Address.

A paper on "A Percussive Tool for Caulking, Chipping, Mining, etc.," by Mr J. MACEWAN ROSS, was read. A discussion followed, and was continued to next General Meeting.

The Premiums of Books awarded at Annual General Meeting of 25th April, 1893, were presented, viz.:—

To Mr ALEXANDER M'ARA, for his paper on "Limes and Cements."

To Mr JOHN CRUM, for his paper on "Professor Wiborg's Air Pyrometers."

And to Mr RANKIN KENNEDY, for his paper on "A New System of Electrical Distribution and Transmission."

The President announced that the Candidates balloted for had been unanimously elected, the names of these gentlemen being as follows :—

AS A MEMBER :—

Mr GEORGE CALDWELL THOMSON, Mechanical Engineer, Riga, Russia.

AS GRADUATES :—

Mr JOHANNES BRUHN, Apprentice Ship Draughtsman, 6 Strone Terrace, Partick, Glasgow.

Mr ANDREW GALLOWAY, Apprentice Civil Engineer, 49 Prince's Square, Strathbungo, Glasgow.

Mr ALEXANDER J. KAY, Apprentice Ship Draughtsman, 38 Hill Street, Garnethill, Glasgow.

Mr B. STEWART MURPHY, Assistant Marine Engineer, c/o Mr H. Hogarth, 12 Great Clyde Street, Glasgow.

Mr WILLIAM S. PRINGLE, Draughtsman, 64 Dee Street, Aberdeen.

THE SECOND GENERAL MEETING of the THIRTY-SEVENTH SESSION of the Institution was held in the Hall of the Institution, 207 Bath Street, on Tuesday, the 21st November, 1893, at 8 P.M.

Mr JOHN INGLIS, President, in the Chair.

The Minute of General Meeting of 24th October, 1893, was read and approved, and signed by the President.

The discussion of a paper on "A Percussive Tool for Caulking, Chipping, Mining, etc.," by Mr J. MACEWAN ROSS, was continued and terminated, and a vote of thanks awarded to the author.

The following papers were read :—

On "The Strength of Large Ships," by Professor J. HARVARD BILES; and

On "The Effect of Reversing the Screw Propeller of a Steamship upon the Steering," by Captain JOHN BAIN.

The discussions of these papers were deferred to next General Meeting.

The President announced that the Candidates balloted for had been unanimously elected, the names of these gentlemen being as follows:—

AS MEMBERS:—

Mr WILLIAM DENHOLM, Works Manager, Meadowside, Glasgow.

Mr ALEXANDER JACK, Mechanical Engineer, Dellburn Works, Motherwell.

Mr JOHN SCOTT, Engineer, New Zealand Refrigeration Company, Omaru, N.Z.

THE THIRD GENERAL MEETING of the THIRTY-SEVENTH SESSION of the Institution was held in the Hall of the Institution, 207 Bath Street, on Tuesday, the 19th December, 1893, at 8 P.M.

Mr GEORGE RUSSELL, Vice-President, in the Chair.

The Minute of General Meeting of 21st November, 1893, was read and approved, and signed by the Chairman.

The Chairman stated that the Council proposed that Honorary Membership should be conferred upon Dr W. H. WHITE of the Admiralty, and according to Rule 12 this was now intimated to the General Meeting.

The discussion of the following papers took place:—

On "The Strength of Large Ships," by Professor J. HARVARD BILES; and

On "The Effect of Reversing the Screw Propeller of a Steamship upon the Steering," by Captain JOHN BAIN.

The discussion of Professor BILES' paper was continued to next General Meeting.

The discussion of Captain BAIN'S paper was closed; Captain BAIN, who was unable to be present, to send reply to remarks.

A vote of thanks was awarded Captain BAIN for his paper.

A paper on "Rotatory and Re-action Engines," by Mr ALEXANDER MORTON, was read, the discussion being continued to next General Meeting.

The Chairman announced that the Candidates balloted for had been unanimously elected, the names of these gentlemen being as follows:—

AS MEMBERS:—

Mr JAMES COOPER, Superintending Engineer, Aberdeen Steam Navigation Company, Aberdeen.

Mr WILLIAM FRASER, Mechanical Engineer, 11 Bothwell Street, Glasgow.

Mr WILLIAM HENRY WATKINSON, Professor of Steam Engines and other Prime Movers in the Glasgow and West of Scotland Technical College, 24 Albion Crescent, Dowanhill, Glasgow.

AS GRADUATES:—

Mr THOMAS H. LAUDER, Engineering Draughtsman, Parkhead Forge, Glasgow.

Mr HERBERT C. SADLER, B.Sc., Shipbuilding Apprentice, 2 Minard Terrace, Partickhill, Glasgow.

Mr THOMAS S. SHUTE, Ship Draughtsman, 34 Hayburn Crescent, Partickhill, Glasgow.

Mr WILLIAM WOTHERSPOON, Apprentice Civil Engineer, 3 Germiston Street, Glasgow.

The Chairman announced that the James Watt Anniversary Dinner would be held on 19th or 20th January.

THE FOURTH GENERAL MEETING of the THIRTY-SEVENTH SESSION of the Institution was held in the Hall of the Institution, 207 Bath Street, on Tuesday, the 23rd January, 1894, at 8 P.M.

Mr DAVID J. DUNLOP, Vice-President, in the Chair.

The Minute of General Meeting of 19th December, 1893, was read and approved, and signed by the Chairman.

The discussion of the following papers took place :—

On "The Strength of Large Ships," by Professor J. HARVARD BILES; and on "Rotatory and Re-action Engines," by Mr ALEXANDER MORTON.

The further discussion of Professor BILES' paper was continued to next General Meeting.

The discussion of Mr ALEXANDER MORTON'S paper was terminated, and a vote of thanks awarded the author.

A paper on "Automatic Bearing Adjustment," by Mr W. A. M'WILLIAM, was read, the discussion being deferred to next General Meeting.

The Chairman announced that the Candidates balloted for had been unanimously elected, the names of these gentlemen being as follows :—

AS AN HONORARY MEMBER :—

Dr WILLIAM HENRY WHITE, C.B., F.R.S., Admiralty, London.

AS MEMBERS :—

Mr WILLIAM ARNOT, Electrical Engineer, City Chambers, Glasgow.
Mr W. A. CHARLTON, Engineer, 96 Hope Street, Glasgow.
Mr ANDREW EWING FLEMING, Engineer, Kandy, Ceylon.
Mr WILLIAM STEVEN, Brassfounder, 18 Sandyford Place, Glasgow.
Mr ALEX. W. STEWART, Electrical Engineer, Crescent, Dalmuir.
Mr J. DENHOLM YOUNG, Engineer, 11 Grange Crescent, Sunderland.

AS GRADUATES:—

Mr JAMES RICHMOND, Assistant Mechanical Engineer, 13 Sutherland Terrace, Hillhead, Glasgow.

Mr JOHN H. RICHMOND, Assistant Engineer, 259 Renfrew Street, Glasgow.

Mr ALEXANDER LENNOX, Pupil Mechanical Engineer, 34 Glasgow Street, Hillhead, Glasgow.

THE FIFTH GENERAL MEETING of the THIRTY-SEVENTH SESSION of the Institution was held in the Hall of the Institution, 207 Bath Street, on Tuesday, the 20th February, 1894, at 8 P.M.

Mr JOHN INGLIS, President, in the Chair.

The Minute of General Meeting of 23rd January, 1894, was read and approved, and signed by the President.

The continued discussion of paper on "The Strength of Large Ships," by Professor J. HARVARD BILES, took place, and was terminated.

The discussion of Mr W. A. M'WILLIAM'S paper on "Automatic Bearing Adjustment," was proceeded with and terminated. Votes of thanks were awarded the authors.

A paper on "An Overhead Power Travelling Crane," by Mr GEORGE RUSSELL, was read, a discussion followed, and was continued to next General Meeting.

The President announced that the Candidates balloted for had been unanimously elected, the names of these gentlemen being as follows:—

AS MEMBERS:—

Mr ROBERT CAIRD, Mechanical Engineer and Shipbuilder, Greenock.

Mr DONALD M'INTOSH, Shipbuilder, Dunglass, Bowling.

AS GRADUATES:—

Mr JOHN M. BELL, Engine Draughtsman, 29 Bentinck Street, Glasgow.

Mr DAVID W. KINMONT, Assistant Civil Engineer, 3 Germiston Street, Glasgow.

THE SIXTH GENERAL MEETING of the THIRTY-SEVENTH SESSION of the Institution was held in the Hall of the Institution, 207 Bath Street, on Tuesday, the 20th March, 1894, at 8 P.M.

Mr JOHN INGLIS, President, in the Chair.

The Minute of General Meeting of 20th February, 1894, was read and approved, and signed by the President.

The continued discussion of paper on "An Overhead Power Travelling Crane," by Mr GEORGE RUSSELL, was proceeded with and terminated, and a vote of thanks awarded Mr Russell.

A paper by Mr WILLIAM ARNOT, Assoc. Memb. Inst. C. E., on "The Glasgow Corporation Electric Light Supply," was read, a discussion followed, and was continued to next General Meeting.

Messrs JOHN TURNBULL, Jr., and PETER STEWART were unanimously appointed auditors of the Treasurer's Accounts for Session.

The President announced that the Candidates balloted for had been unanimously elected, the names of these gentlemen being as follows:—

AS MEMBERS:—

Mr THOMAS YOUNG, Engineer, 58 Renfield Street, Glasgow.

Mr GEORGE F. DUNCAN, Ardenclutha, Port-Glasgow.

Mr WILLIAM D. FERGUSON, Albert Villa, Ravenhill Road, Belfast.

Mr DONALD KING, Martinez Rivas Palmer, Bilbao, Spain.

Mr ALLAN M'KEAND, 17 Queen Margaret Drive, Kelvinside.

Mr MATTHEW RANKIN, Fassoula Iron Works, Smyrna.

AS AN ASSOCIATE:—

Mr THOMAS A. ROSS, Marine Superintendent, Glenwood, Bridge-of-Weir.

AS GRADUATES:—

Mr FREDERICK WALLACE BAKER, Student of Naval Architecture, 11 Doune Terrace, Glasgow.

Mr RICHARD BELL, Apprentice Mechanical Engineer, 17 Minerva Street, Glasgow.

Mr JOHN BOYD MATHER, Draughtsman, Kirkhill, Mearns.

Mr WILLIAM B. STEARNS, Student of Naval Architecture, 11 Doune Terrace, Kelvinside.

THE THIRTY-SEVENTH ANNUAL GENERAL MEETING of the INSTITUTION was held in the Hall of the Institution, 207 Bath Street, on Tuesday, the 24th April, 1894, at 8 P.M.

Mr JOHN INGLIS, President, in the Chair.

The Minute of General Meeting of 20th March, 1894, was read and approved, and signed by the President.

The Treasurer's Annual Financial Statement, duly audited, was submitted and adopted.

A vote of thanks was awarded the Auditors.

The following awards were made for Papers read Session 1892-93:

The Marine Engineering Medal was awarded to Mr SINCLAIR COUPER for his Paper on "The Return Tubular Marine Boiler for High Pressures."

Premiums of Books were awarded to Mr W. CARLILE WALLACE, for his Paper on "Some Causes of Failure in Tunnel Shafting;" to Mr JOHN BARR for his Paper on "Testing Machinery and

Electric Water Level Recording Apparatus;" and to Mr E. G. CAREY for his Paper on "The Bridges of the Manchester Ship Canal."

The Election of Office-Bearers then took place :—

Messrs JAMES ROWAN and HENRY A. MAVOR were elected Vice-Presidents; and Messrs ANDREW S. BIGGART, LINDSAY BURNET, DAVID J. DUNLOP, W. CARLILE WALLACE, and DAVID C. HAMILTON, were elected Councillors.

The discussion of Mr WILLIAM ARNOT'S paper on "The Glasgow Corporation Electric Light Supply" was continued and terminated, a vote of thanks being awarded the author.

The President announced that the Candidates balloted for had been unanimously elected, the names of these gentlemen being as follows :—

AS MEMBERS :—

MOHAMED ANIS BEY, Mechanical Engineer and Professor of Mechanics, Polytechnic School, Cairo.

Mr WALLACE FAIRWEATHER, Mechanical Engineer, 62 St. Vincent Street, Glasgow.

Mr A. CAMPBELL HOLMS, Surveyor to Lloyd's Register, 3 Athole Gardens, Glasgow.

Mr WILLIAM KENNEDY, Civil Engineer and Railway Contractor, 13 Victoria Crescent, Dowanhill.

AS GRADUATES :—

Mr JOHN J. SHAW, Mechanical Draughtsman, 12 Lynedoch Place, Glasgow.

Mr CHARLES SMITH, Marine Engine Draughtsman, 8 Muirpark Gardens, Partick.

TREASURER'S STATEMENT—1893-94.

DR. GENERAL FUND. CR.

To Balance in Union Bank at close of Session 1892-93,					£616	8	1
Subscriptions received:							
Session 1893-94,		£716	0	0			
Arrears of Previous Sessions,		65	10	0			
		£781	10	0			
Deduct Entry Money transferred to Building Fund, ..		7	0	0			
					774	10	0
Sales of Transactions, ...					19	3	4
Bank Interest, ...					7	18	4
					£1417	19	9

By Amount paid Treasurer of House Committee as Institution's proportion of Expenditure, for Session 1893-94,...					£120	0	0
Printing, ...					203	19	8
Lithography, ...					96	19	0
Premiums for Papers, ...					14	18	1
Graduate Section Medal, ...					1	7	6
Salary to Secretary, ...					150	0	0
Commission Collection of Arrears of Subscriptions, viz. :—							
For Session 1893-94, ...	£458	10	0				
For Previous Sessions, ...	65	10	0				
	£524	0	0	at 5 %	26	4	0
Postages, ...					50	6	0
Delivery of Annual Volumes, ...					6	10	0
Stationery, Insurance, &c., ...					13	0	0
New Books for Library, ...					1	18	8
Binding Periodicals in Library, ...					6	14	0
Reporting, ...					15	17	6
Cash to New Buildings Account to meet Interest on Loan, from Medal Funds, ...					16	0	0
Petty Cash, ...					1	4	9
Balance in Union Bank, ...					693	0	7
					£1417	19	9

DR. MARINE ENGINEERING MEDAL FUND. CR.

To Balance in Union Bank at close of Session 1892-93, ...	£14	9	11	*By* Balance in Union Bank, ...	£27	5	3
Interest on Capital lent to New Buildings Account,	10	0	0				
,, Mortgage, Glasgow Corporation,	2	15	4				
	£27	5	3		£27	5	3

DR. RAILWAY ENGINEERING MEDAL FUND. CR.

To Balance in Union Bank at close of Session 1892-93, ...	£17	12	9	*By* Balance in Union Bank, ...	£24	17	9
Interest on Capital lent to New Buildings Account,	6	0	0				
,, Mortgage, Glasgow Corporation,	1	5	0				
	£24	17	9		£24	17	9

DR. GRADUATE MEDAL FUND. CR.

To Balance in Union Bank at close of Session 1892-93,	£1	0	8	*By* Balance in Union Bank, ...	£1	16	4
Interest on Mortgage, Glasgow Corporation,	0	15	8				
	£1	16	4		£1	16	4

DR. BUILDING FUND. CR.

To Balance in Union Bank at close of Session 1892-93,	£22	15	8	*By* Balance in Union Bank, ...	£61	17	6
Life Associate, ...	15	0	0				
Entry Money, ...	7	0	0				
Interest on Mortgage, Glasgow Corporation,	17	1	10				
	£61	17	6		£61	17	6

DR. NEW BUILDINGS ACCOUNT. CR.

To Capital to meet Cost of New Buildings, viz. :—				*By* Paid on New Buildings, ...	£2047	8	1
From General Fund, ...	£542	15	7	Interest on Loans, viz. :—			
,, Marine Engineering Medal Fund, ...	351	11	2	To Marine Engineering Medal Fund, £10 0 0			
,, Railway Engineering Medal Fund, ...	213	13	3	,, Railway Engineering Medal Fund, 6 0 0			
,, Building Fund, ...	939	8	1		16	0	0
	£2047	8	1				
Cash received from General Fund to meet Interest on Loans, ...	16	0	0				
	£2063	8	1		£2063	8	1

GLASGOW, *17th April, 1894.*—We have examined the foregoing Annual Financial Statement of Treasurer, the Accounts of the Marine and Railway Engineering Medal Funds, the Graduate Medal Fund, the Building Fund, and the New Buildings Account, and find the same duly vouched and correct, the Amounts in Bank being as stated.

(Signed) JOHN TURNBULL, Jr. } AUDITORS.
PETER STEWART, }

SUBSCRIPTION ACCOUNT.

Dr.						Cr.				
To Subscriptions due as per Roll, viz. :—						*By* Subscriptions received, as per Cash Book, viz.:—				
Arrears due at close of last Session, ...			£105	10	0	Arrears of Subscriptions previous to Session 1893-94, ...			£65	10	0
Deduct Irrecoverable and Deceased,			22	0	0						
			£83	10	0						
Add elected at Annual General Meeting of 25th April, 1893, ...			15	10	0						
Session 1893-94 :—					£99	0	0				
427 Members	at £1	10	0	—£640	10	0	Session 1893-94 :—				
3 New Members	,, 2	10	0	— 7	10	0	377 Members	at £1 10 0	—£565	10	0
8 ,,	,, 2	0	0	— 16	0	0	3 New Members	,, 2 10 0	— 7	10	0
10 ,,	,, 1	10	0	— 15	0	0	8 ,,	,, 2 0 0	— 16	0	0
28 Associates	,, 1	0	0	— 28	0	0	8 ,,	,, 1 10 0	— 12	0	0
1 New Associate	,, 1	5	0	— 1	5	0	27 Associates	,, 1 0 0	— 27	0	0
232 Graduates	,, 0	10	0	— 116	0	0	176 Graduates	,, 0 10 0	— 88	0	0
					824	5	0			716	0	0
							Arrears due for Session 1893-94, ...		£108	5	0
							Arrears due for previous Sessions,		33	10	0
										141	15	0
					£923	5	0			£923	5	0

BANK ACCOUNT.

Dr.			Cr.		
To Balances at close of Session 1892-93:—			*By* Amounts Drawn, Session 1893-94, ...	£928	1 10
General Fund, ...	£616	8 1	Balances in Union Bank, ...	808	17 5
Marine Engineering Medal Fund, ...	14	9 11			
Railway Engineering Medal Fund, ...	17	12 9			
Graduate Medal Fund, ...	1	0 8			
Building Fund, ...	22	15 8			
Amounts lodged, Session 1893-94, ...	1056	13 10			
Interest, Session 1893-94, ...	7	18 4			
	£1736	19 3		£1736	19 3

CAPITAL ACCOUNT.

GENERAL FUND.

Loan to New Buildings Account, ...	£542 15 7		
Mortgage, Glasgow Corporation, ...	35 0 0		
Cash in Union Bank, ...	693 0 7		
		£1,270	16 2

MARINE ENGINEERING MEDAL FUND.

Loan to New Buildings Account, ...	£351 11 2		
Mortgage, Glasgow Corporation, ...	90 0 0		
Cash in Union Bank, ...	27 5 3		
		468	16 5

RAILWAY ENGINEERING MEDAL FUND.

Loan to New Buildings Account, ...	£213 13 3		
Mortgage, Glasgow Corporation, ...	40 0 0		
Cash in Union Bank, ...	24 17 9		
		278	11 0

GRADUATE MEDAL FUND.

Mortgage, Glasgow Corporation, ...	£25 0 0		
Cash in Union Bank, ...	1 16 4		
		26	16 4

BUILDING FUND.

Amount to New Buildings Account, ...	£939 8 1		
Mortgage, Glasgow Corporation, ...	560 0 0		
Cash in Union Bank, ...	61 17 6		
		1,561	5 7

ARREARS OF SUBSCRIPTIONS.

Arrears due for Session 1893-94, ...	£108 5 0		
Do. previous Sessions, ...	33 10 0		
		141	15 0
		£3,748	0 6

HOUSE EXPENDITURE ACCOUNT. (ABSTRACT 1893-94.)

Dr.					Cr.			
To Rents for Letting Rooms, ...			£60	0 0	*By* Balance due Treasurer		£0	19 0
Amounts Received by Treasurer to meet Expenses, viz.:—					Interest on Bond, ...		116	15 0
From Institution of Engineers and Shipbuilders, ...	£120	0 0			Salary to Curator, ...		100	0 0
From Philosophical Society, ...	120	0 0			Salary to Attendant at Library, Cleaning, &c., ...		35	0 0
			240	0 0	Taxes, ...		19	5 11½
Balance due Treasurer, ...			9	5 11	Feu-duty, etc., ...		1	16 11
					Gas Rates, ...		11	19 11
					Water Rates, ...		5	11 8
					Coals, ...		4	8 10
					Insurance, ...		7	15 0
					Repairs, ...		5	3 7
					Stationery, etc., ...		0	10 0½
			£309	5 11			£309	5 11

The Account of the House Committee is kept by Mr John Mann, C.A., Treasurer to the Committee, and is periodically audited by the Auditors appointed by the Institution and the Philosophical Society.

W. J. MILLAR, *Secretary to House Committee.*

OBITUARY.

Honorary Member.

Professor TYNDALL was an Honorary Member of the Institution. He was born at Leighlin Bridge, near Carlow, Ireland, on 21st August, 1820. When aged 19, he entered the Ordnance Survey, and in 1844 was connected with an engineering firm in Manchester. In 1847 he acted as teacher in Queenwood College, Hampshire, and a year later went to Germany to study chemistry.

The results of his investigations made there on such subjects as diamagnetism and the magneto-optic properties of crystals were afterwards published. Returning to this country in 1851, he was appointed Professor of Natural Philosophy in the Royal Institution.

Visiting Switzerland in 1856, he studied the motion and structure of glacier ice.

Professor Tyndall's researches in connection with heat, light, and other forms of motion are well known, as his faculty of popular exposition enabled him to bring the results of his investigations, through the medium of books, lectures, and papers, clearly before the general public.

Professor Tyndall, besides other offices, held that of President of the British Association, at the Belfast meeting, in 1874. He was a Fellow of the Royal Society, and held university degrees. He died at Hindhead House, Haslemere, on 4th December, 1893.

Members.

Mr DAVID HENDERSON was elected a Member of the Institution in 1877. He was senior partner of the firm of Messrs D. & W. Henderson & Co., shipbuilders and engineers.

Mr Henderson was born at Pittenweem, Fifeshire. At an early age he came to Glasgow, and thereafter led a seafaring life for many years, rising ultimately to the position of Captain. During the Crimean War, he commanded the troopship "Clyde." Retiring from the service he, along with his brother William, commenced business in Glasgow as naval architects. Some years later they started the Finnieston Steam Ship Works, and in 1873 purchased the shipbuilding yard and graving docks at Meadowside, Partick, from Messrs Tod & M'Gregor, where the firm has turned out a great variety of work for well known local and foreign owners, including large ocean steamers and sailing ships, river steamers, and various famous yachts.

Mr Henderson died at his residence, Ardenvohr, Row, in his 77th year.

Mr JAMES REID became a Member of the Institution in 1868, and held office at various times as a Councillor and Vice-President, and, during Sessions 1882-83 and 1883-84, as President.

Mr Reid's connection with engineering dates back to the time when manual appliances were not largely replaced as they are now by machine tools, and his skill and energy were frequently shown in meeting and overcoming mechanical difficulties. He was born at Kilmaurs in 1822. After working for a time as blacksmith's assistant, he went to Greenock, to the works of Messrs Scott, Sinclair & Co., and thereafter to those of Messrs Caird & Co. When about 30 years of age, he came to be manager of the Hyde Park Locomotive Works, situated at that time in Anderston. Subsequently, he went to Manchester, and was for a time manager of the locomotive works of Messrs Sharp, Stewart & Co. there. About 1863 he returned to Glasgow as managing partner of the firm of Messrs Neilson & Co., Hyde Park Locomotive Works, Springburn; and in 1876 he became owner of these extensive works, which had grown much through his skill and energy.

In 1877 Mr Reid entered the Glasgow Town Council, holding office for three years, and in 1893 was elected Lord Dean of Guild.

He was a member of the Springburn School Board, and held office for a time as chairman, and was a Justice of the Peace for the Counties of Lanark and Perth, and in many other ways identified himself with objects for promoting social improvement.

Mr Reid died at St. Andrews, on 23rd June last.

Associates.

Sir ARCHIBALD ORR EWING was admitted an Associate in 1859. He was born at Glasgow in 1818, attended the University, and afterwards was engaged in the management of Turkey red and print works.

In 1845 he started the firm of Archibald Orr Ewing & Co., the works being in the Vale of Leven, where he showed great ability and energy. He took part in the affairs of the city as Lord Dean of Guild about 1865. The erection of the new buildings for the University at Gilmorehill received his influential support.

In 1868 he was returned M.P. for Dumbartonshire, and only retired at the last general election.

He was created a baronet in 1886, and was the proprietor of several country estates, and, besides other appointments, was Deputy Lieutenant for the counties of Dumbarton, Stirling, and Lanark.

He died on 27th November, 1893.

Mr JOHN MORGAN joined the Institution as an Associate in 1865. He was a son of the Rev. John Morgan, minister of the parish of Gretna, Dumfriesshire. Mr Morgan was for some years in business in the West Indies, and returned to this country about 1850. He devoted himself much to literary pursuits.

Mr Morgan died at Springfield House, Springburn, where he had long resided, aged 85.

Mr WILLIAM M'IVOR MORISON joined the Institution as an Associate in 1883, and took much interest in marine engineering

and naval architecture. In 1890 he contributed some interesting notes, published in Volume XXXIV. of the Transactions, relating to the "Great Britain," as she appeared when lying at Kingstown in 1845.

Mr Morison was well known in musical and art circles, his marine sketches being always truly drawn and spirited in treatment. Mr Morison was the author of several prose and poetical pieces.

He was a native of Dublin, and died at Rothesay, on 8th December, 1893, aged 63.

REPORT OF THE LIBRARY COMMITTEE.

THE additions to the Library during the present session include 2 volumes by purchase (in continuation of series), 11 volumes, 7 parts, and 7 pamphlets by donation, while 77 volumes and 32 parts were received in exchange for the Transactions of the Institution. Of the periodical publications received in exchange 17 are weekly, 13 monthly, and 2 quarterly.

29 volumes were bound during the session.

The total volumes in the Library amount to 1963.

On behalf of the Institution, the Committee now beg to tender its best thanks for the presentations made.

Members, Associates, and Graduates are reminded that the Committee will be glad to receive, as donations, any volumes or pamphlets they may feel disposed to present to the Library.

Members of the Institution, of all grades, have the privilege of using, for reference, the Library of the Philosophical Society.

DONATIONS TO LIBRARY.

The First Screw Propelled Boats, by F. B. Stevens. From E. A. Stevens, Esq., President, Hoboken Ferry Co.

Report, Water Supply, Queensland. From J. B. Henderson, Esq., Government Hydraulic Engineer.

On the Influence of Oil on Waves at Sea, by W. J. Millar. From the Author.

Catalogue of Section One of the Museum of the Geological Survey of Canada, by G. C. Hoffman; 8vo. Ottawa, 1893. From Geological Survey of Canada.

Catalogue of the Stratigraphical Collection of Canadian Rocks, prepared for the World's Columbian Exposition, Chicago, 1893, by W. F. Ferrier; 8vo. Ottawa, 1893. From Geological Survey of Canada.

International Maritime Congress, Minutes of Proceedings, 5 Parts:—Section I. Harbours and Breakwaters; Section II. Docks; Section III. Shipbuilding and Marine Engineering; Section IV. Lighthouses, Buoys, Fog Signals, etc.; Section V. General Report, 2nd Meeting.

Projets d'Unification des Filetages et des Janges de Tréfilerie; 4to. Paris, 1893. From Société d'Encouragement pour l'Industrie Nationale, Paris.

Duty Trial of a Fly-wheel, High Duty, Automatic Cut-off, Cross-Compound Pumping Engine, designed and built by the Geo. F. Blake Manufacturing Co., New York, &c.; 8vo Pamphlet, 1892. From Geo. F. Blake Manufacturing Co.

Goulburn Weir and its Dependent System of Works. A Descriptive Memorandum compiled from Official Records, by Stewart Murray, Chief Engineer, Victoria.

Manual of Naval Architecture, 3rd edition, by W. H. White, C.B., LL.D.; 8vo. London, 1894. From the Author.

An Account of the Strata of Northumberland and Durham, as Proved by Borings and Sinkings; part S-T, 1894. From North of England Institution of Mining and Mechanical Engineers.

International Engineering Congress, Chicago. Papers read before Division A—Civil Engineering, forming Vols. XXIX. and XXX.; Transactions American Society Civil Engineers. From the Society.

Practical Engineer, Vol. I. From Professor A. H. Sexton.

Unification des Filetages et des Janges de Tréfilerie; 4to pamphlet, 1894. From Société d'Encouragement pour l'Industrie Nationale, Paris.

Lloyd's Register, 1893-94, with Rules and Regulations. From the Association.

On Lubrication, by J. Veitch Wilson. From the Author.

From Keel to Truck: a Marine Dictionary, by Captain Paasch. From the Author.

NEW BOOKS ADDED TO THE LIBRARY.

Pollard & Dudebout, Théorie du Navire, Vol. IV.; 8vo. Paris, 1893.
Year Book of Scientific and Learned Societies of Great Britain and Ireland, 1894.
Album for Cabinet Size Portraits of Members of the Association.

THE INSTITUTION EXCHANGES TRANSACTIONS WITH THE FOLLOWING SOCIETIES, &C.:—

Bristol Naturalists' Society, Bristol.
Institution of Civil Engineers, London.
Institution of Civil Engineers of Ireland, Dublin.
Institution of Mechanical Engineers, London.
Institution of Naval Architects, London.
Institute of Marine Engineers, London.
Iron and Steel Institute, London.
Liverpool Engineering Society, Liverpool.
Liverpool Polytechnic Society, Liverpool.
Literary and Philosophical Society of Manchester, Manchester.
Lloyd's Register of British and Foreign Shipping, London.
Manchester Association of Engineers, Manchester.
Midland Institute of Mining, Civil, and Mechanical Engineers, Barnsley.
Mining Institute of Scotland, Hamilton.
North-East Coast Institution of Engineers and Shipbuilders, Newcastle-on Tyne.
North of England Institute of Mining and Mechanical Engineers, Newcastle-on-Tyne.
Patent Office, London.
Philosophical Society of Glasgow, Glasgow.
Royal Dublin Society, Dublin.
Royal Scottish Society of Arts, Edinburgh.
Shipmasters' Society, London.

Society of Arts, London.
Society of Engineers, London.
South Wales Institute of Engineers, Swansea.
The Hull and District Institution of Engineers and Naval Architects, Hull.
The Junior Engineering Society, London.
The Sanitary Institute of Great Britain, London.
American Society of Civil Engineers, New York.
American Society of Mechanical Engineers, New York.
Association des Ingénieurs, Gand, Belgium.
Austrian Engineers' and Architects' Society, Vienna.
Bureau of Steam Engineering, Navy Department, Washington.
Canadian Institute, Toronto.
Canadian Society of Civil Engineers, Montreal.
Engineers' and Architects' Society of Naples, Naples.
Geological Survey of Canada, Montreal.
Master Car Builders' Association, Chicago, U.S.A.
Royal Academy of Sciences, Lisbon.
Royal Society of Tasmania, Hobart.
Smithsonian Institution, Washington, U.S.A.
Société des Ingénieurs Civils de France, Paris.
Société Industrielle de Mulhouse, Mulhouse.
Société d'Encouragement pour l'Industrie Nationale, Paris.
Société des Anciens Elèves des Ecoles Nationales d'Arts et Métiers, Paris.
Société des Sciences Physiques et Naturelles de Bordeaux, Bordeaux.
The Colliery Engineer, Scranton, Pa., U.S.A.
The Engineering Association of New South Wales, Sydney.
The Technical Society of the Pacific Coast, San Francisco, U.S.A.

COPIES OF THE TRANSACTIONS ARE FORWARDED TO THE FOLLOWING COLLEGES, LIBRARIES, &C.:—

Cornell University, Ithaca, U.S.A.
Dumbarton Free Public Library, Dumbarton.

Glasgow University, Glasgow.
Lloyd's Office, London.
Mercantile Marine Service Association, Liverpool.
M'Gill University, Montreal.
Mitchell Library, Glasgow.
Royal Naval College, Greenwich.
Stevens Institute of Technology, Hoboken, U.S.A.
Stirling's Library, Glasgow.
The Glasgow and West of Scotland Technical College, Glasgow.
The Yorkshire College, Leeds.
Trinity College, Dublin.
Underwriters' Rooms, Glasgow.
Do. Liverpool.
University College, London.

PUBLICATIONS RECEIVED PERIODICALLY IN EXCHANGE FOR INSTITUTION TRANSACTIONS:—

Cassier's Magazine.
Colliery Guardian.
Engineering.
Industries and Iron.
Iron and Coal Trades' Review.
Iron and Steel Trades' Journal.
Machinery.
Nature.
The Contract Journal.
The Engineer.
The Engineering Review.
The Machinery Market.
The Marine Engineer.
The Mechanical World.
The Practical Engineer.
The Steamship.

Indian Engineering.
Journal de l'Ecole Polytechnic.
L'Industria.
Portfeuille Economique des Machines.
Revue Industrielle.
Stahl und Eisen.
The American Manufacturer and Iron World.
The Indian Engineer.

ARCH. BARR, D.Sc.,
Hon. Librarian and Convener.

The Library of the Institution, at the Rooms, 207 Bath Street, is open daily from 9-30 a.m. till 8 p.m.; on Meeting Nights of the Institution and Philosophical Society, till 10 p.m.; and on Saturdays till 2 p.m. Books will be lent out on presentation of Membership Card to the Sub-Librarian.

Members have also the privilege of consulting the Books in the Library of the Philosophical Society.

The use of Library and Reading Room is open to Members, Associates, and Graduates.

The Library is open during Summer from 9-30 a.m. till 5 p.m. and on Saturdays till 2 p.m.

The Portrait Album lies in the Library for the reception of Members' Portraits.

Members are requested when forwarding Portraits to attach Signature to bottom of Carte.

The Library Committee are desirous of calling the attention of Readers to the "Recommendation Book," where entries can be made of titles of books suggested as suitable for addition to the Library.

Copies of Library Catalogue and Supplement, price 6d; or separately, 3d each, may be had at the Library, 207 Bath Street, or from the Secretary.

A List of the Papers read and Authors' Names, from the First to the Thirty-third Sessions, will be found in Vol. XXXIII.

As arranged by the Council, a Register Book for Graduates now lies in the Library for the inspection of Members, the object being to assist Graduates of the Institution in finding suitable appointments.

Annual Subscriptions are due at the commencement of each Session, viz. :—

MEMBERS, £1 10s; ASSOCIATES, £1; GRADUATES, 10s.

LIFE MEMBERS, £20; LIFE ASSOCIATES, £15.

Membership Application Forms can be had at the Secretary's Office, 207 Bath Street, or from the Librarian at the Rooms, 207 Bath Street.

The Council, being desirous of rendering the Transactions of the Institution as complete as possible, earnestly request the co-operation of Members in the preparing of Papers for reading and discussion at the General Meetings.

Early notice of such Papers should be sent to the Secretary, so that the dates of reading may be arranged.

Copies of the reprint of Vol. VII., containing paper on "The Loch Katrine Water Works," by Mr J. M. Gale, C.E., may be had from the Secretary; price to Members, 7/6.

Members of this Institution, who may be temporarily resident in Edinburgh, will, on application to the Secretary of the Royal Scottish Society of Arts, at his Office, 117 George Street, be furnished with Billets for attending the Meetings of that Society.

The Meetings of the Royal Scottish Society of Arts are held on the 2nd and 4th Mondays of each month, from November till April, with the exception of the 4th Monday of December.

LIST

OF

HONORARY MEMBERS, MEMBERS, ASSOCIATES, AND GRADUATES

OF THE

Institution of Engineers and Shipbuilders in Scotland

(INCORPORATED),

AT CLOSE OF SESSION 1893-94.

HONORARY MEMBERS.

Professor CHARLES PIAZZI SMYTH, LL.D., F.R.S.E., Clova, Ripon.

Lord KELVIN, A.M., LL.D., D.C.L., F.R.SS.L. and E., Professor of Natural Philosophy in the University of Glasgow.

Lord ARMSTRONG, C.B., LL.D., D.C.L., F.R.S., Newcastle-on-Tyne.

Professor H. VON HELMHOLTZ, Berlin.

Lord BRASSEY, K.C.B., D.C.L., 4 Gt. George Street, Westminster, London, S.W.

Sir HENRY BESSEMER, F.R.S., 165 Denmark Hill, Surrey.

Lord BLYTHSWOOD, Blythswood, Renfrewshire.

Professor A. B. W. KENNEDY, LL.D., F.R.S., 19 Little Queen Street, Westminster, London, S.W.

Sir DIGBY MURRAY, Bart., Board of Trade, London, S.W.

WILLIAM HENRY WHITE, C.B., F.R.S., LL.D., Admiralty, London.

MEMBERS.

DATE OF ELECTION.			
1889, Nov. 19:	William	Adam,	98 Dixon Avenue, Crosshill, Glasgow.
1889, Apr. 23:	James	Adamson,	58 Romford Road, Stratford, Essex.
1883, Mar. 20:	Geo. A.	Agnew,	Woodland Villa, Govan, Glasgow.
1889, Oct. 22:	William	Aitchison,	Vryheid Lust Plantation, Demerara.
1872, Feb. 27:	A. B.	Allan,	Burgh Surveyor, Burgh Chambers, Govan, G'gow,
1890, Jan. 21:	John M.	Allan,	Oak Bank, Shandon.
1869, Jan. 20:	William	Allan, M.P.,	Scotia Engine Works, Sunderland.
1864, Dec. 21:	James B.	Alliott,	The Park, Nottingham.
G. 1880, Feb. 24: M. 1889, Oct. 22:	George	Almond,	Hordern Cottage, Belmont, near Bolton.
G. 1865, Feb. 15: M. 1877, Dec. 18:	Wm. M.	Alston,	50 Sardinia Terrace, Hillhead, Glasgow.
1886, Dec. 21:	Alexander	†Amos,	Sydney, New South Wales.
1886, Dec. 21:	Alexander	†Amos, Jun.,	247 George Street, Sydney, New South Wales.
G. 1874, Feb. 24: M. 1880, Nov. 23:	James	Anderson,	100 Clyde St., Glasgow.
1892, Dec. 20:	James H.	Anderson,	Caledonian Ry., Glasgow.
1860, Nov. 28:	Robert	Angus,	Lugar, Ayrshire.
1887, Dec. 20:	W. David	Archer,	Edin Villa, Dalmuir.
1894, Jan. 23:	William	Arnot,	Engineer, Corporation Electric Lighting, City Chambers, Glasgow.

Names marked thus * were Members of Scottish Shipbuilders' Association at Incorporation with Institution, 1865.

Names marked thus † are Life Members.

1875, Dec. 21: Thomas A. Arrol, Germiston Works, Glasgow.
1885, Jan. 27: Sir Wm. †Arrol, LL.D., 10 Oakley Ter., Glasgow.
Original: David Auld, 13 Broompark Drive, Dennistoun, Glasgow.
1885, Apr. 28: John Auld, Whitevale Foundry, Glasgow.

1880, Feb. 24: William N. Bain, 40 St. Enoch Square, Glasgow.
1891, Apr 28: Wm. P. C. Bain, Lochrin Iron Works, Coatbridge.
1881, Oct. 25: Allan W. Baird, Eastwood Villa, St. Andrew's Drive, Pollokshields, Glasgow.
1887, Nov. 22: Michael R. Barnett, 48 Portland St., Lindow, Lancaster.
1876, Jan. 25: James Barr, Underwood House, Paisley.
1882, Mar. 21: Prof. Archd. Barr, D.Sc., Royston, Dowanhill.
(Member of Council and Honorary Librarian.)
1881, Mar. 22: George H. Baxter, Clyde Navigation Works, Dalmuir.
G. 1877, Nov. 20: / M. 1887, Apr. 6: J. T. Baxter, 11 Bothwell St., Glasgow.
1875, Jan. 26: Charles Bell, The Birches, Stirling.
David *Bell, 19 Eton Place, Hillhead, Glasgow.
1880, Mar. 23: Imrie Bell, 36 Kersland Terrace, Hillhead, Glasgow.
1889, Jan. 22: W. Reid Bell, 204 St. Vincent Street, Glasgow.
1890, Jan. 21: R. J. Beveridge, Lloyd's Register, 342 Argyle St., Glasgow.
1894, Apr. 24: Prof. Mohamed Anis Bey, Ministère des Travaux Publics, Cairo.
G. 1883, Mar. 20: / M. 1884, Nov. 25: Andrew S. Biggart, *(Vice-President.)* Baltic House, Baltic Street, Bridgeton, Glasgow.

1884, Mar. 25:	Prof. John Harvard Biles, (*Member of Council.*)	Glasgow University, Glasgow.
1890, Mar. 25:	John R. Bird,	10 Morrison St., Glasgow.
1869, Feb. 17:	Geo. M'L. Blair,	127 Trongate, Glasgow.
G. 1884, Jan. 22: M. 1889, Oct. 22:	H. MacLellan Blair,	Clutha Iron Works, Vermont Street, Glasgow.
1867, Mar. 27:	James M. Blair,	Williamcraigs, Linlithgowshire.
1883, Oct. 23:	William L. Bone,	Ant and Bee Works, West Gorton, Manchester.
1891, Jan. 27:	William Bow,	Thistle Works, Paisley.
1874, Jan. 27:	Howard Bowser,	13 Royal Crescent, W., Glasgow.
1890, Mar. 25:	George R. Brace,	William Denny & Sons, Dumbarton.
1880, Mar. 23:	James Brand,	109 Bath Street, Glasgow.
1891, Dec. 22:	Henry Brier,	7 Park Terrace, Crosshill, Glasgow.
G. 1873, Dec. 23: M. 1884, Jan. 22:	James Broadfoot,	55 Finnieston St., Glasgow.
1865, Apr. 26:	Walter *Brock,	Engine Works, Dumbarton.
1893, Apr. 25:	Thomas M. Broom,	Oakfield, East Greenock.
1890, Jan. 21:	Alex. F. G. Brown,	Swindrige Muir, Dalry.
1859, Feb. 16:	Andrew *Brown,	London Works, Renfrew.
G. 1876, Jan. 25: M. 1885, Nov. 24:	Andrew M'N. Brown,	Castlehill House, Renfrew.
G. 1879, Feb. 25: M. 1891, Oct. 27:	A. T. Brown,	18 Glencairn Drive, Pollokshields.
1886, Mar. 23:	George Brown,	Kirklee, Dumbarton.
G. 1886, Oct. 26: M. 1892, Jan. 26:	James Brown,	Engine Department, Astilleros del Nervion, Bilbao, Spain.
1885, Apr. 28:	Walter Brown,	Castlehill, Renfrew.
G. 1874, Jan. 27: M. 1884, Jan. 22:	William Brown,	Meadowflat, Renfrew.

1880, Dec. 21: William	Brown,	Albion Works, Woodville Street, Govan, Glasgow.
1889, Dec. 17: William	Brown,	Glasgow Locomotive Works, Glasgow, S.S.
1890, Mar. 25: William	Brown,	Old Hall, Kilmalcolm.
1889, Dec. 17: W. Paton	Buchan,	36 Renfrew St., Glasgow.
G. 1872, Oct. 24: M. 1885, Nov. 22: Hartvig	Burmeister,	Rahr & Raundrup, 1 Princess Street, Manchester.
G. 1876, Dec. 19: M. 1889, Oct. 22: Lindsay	Burnet,	Moore Park Boiler Works, Govan, Glasgow.
1880, Dec. 21: James W.	Burns,	74 Broomielaw, Glasgow.
1881, Mar. 22: Thomas	Burt,	60 St. Vincent Crescent, Glasgow.
1878, Oct. 29: Edward B.	Caird,	777 Commercial Rd., Limehouse, London.
1894, Feb. 20: Robert	Caird,	Caird & Co., Greenock.
1878, Dec. 17: James	Caldwell,	130 Elliot Street, Glasgow.
1890, Feb. 25: Donald	Cameron,	Municipal Offices, Exeter.
1885, Mar. 24: John B.	Cameron,	111 Union Street, Glasgow.
1875, Dec. 21: J. C.	Cameron,	24 Pollok Street, Glasgow.
1889, Apr. 23: John	Cameron,	London Works, Renfrew.
1890, Mar. 25: William	Cameron,	Fereneze Ter., Barrhead.
1890, Jan. 21: John	Campbell,	8 Broomhill Drive, Partick.
1889, Oct. 22: Evelyn G.	Carey,	4 Sunnyside Avenue, Uddingston.
1868, Dec. 23: David	Carmichael,	Ward Foundry, Dundee.
1881, Nov. 22: John H.	Carruthers,	Ashton, Queen Mary Av., Crosshill, Glasgow.
1892, Feb. 23: James	Chalk,	68 Bath Street, Glasgow.
1894, Jan. 23: W. A.	Charlton,	96 Hope Street, Glasgow.
1893, Apr. 25: R. Barclay	Christie,	123 Hope Street, Glasgow.
1883, Jan. 23: John	Clark,	British India Steam Navigation Co., 15 Austin Friars, London, E.C.

1893, Apr. 25: William	Clark,	208 St. Vincent Street, Glasgow.
1892, Nov. 22: Alexander	Cleghorn,	20 Moston Ter., Mayfield, Edinburgh.
1891, Oct. 27: Charles	Clarkson,	Francis Morton & Co., Hamilton Iron Works, Garston, near Liverpool.
1884, Feb. 26: James T.	Cochran,	Cochran & Co., Shipbuilders, Birkenhead.
1890, Mar. 25: John	Cochrane,	Grahamstone Foundry, Barrhead.
1881, Oct. 25: George	Cockburn,	24 Sussex Street, Glasgow.
G. 1876, Dec. 19: / M. 1884, Mar. 25: Charles	Connell,	Whiteinch, Glasgow.
G. 1877, Dec. 18: / M. 1885, Nov. 24: James	Conner,	Assistant Locomotive Engineer, Highland Railway, Inverness.
1893, Dec. 19: James	Cooper,	Aberdeen Steam Navigation Company, Aberdeen.
1864, Feb. 17: James	Copeland,	16 Pulteney St., Glasgow.
1864, Jan. 20: William R.	Copland,	146 West Regent Street, Glasgow.
1868, Mar. 11: S. G. G.	Copestake,	Glasgow Locomotive Works, Little Govan, Glasgow.
1892, Oct. 25: Elmer L.	Corthell,	71 Broadway, New York.
G. 1880, Dec. 21 / M. 1891, Oct. 27 Sinclair (*Member of Council.*)	Couper,	Moore Park Boiler Works, Govan, Glasgow.
1866, Nov. 28: M'Taggart	Cowan,	109 Bath Street, Glasgow.
1861, Dec. 11: William	Cowan,	46 Skene Ter., Aberdeen.
1883, Dec. 18: Samuel	Crawford,	John Scott & Co., Engineers & Shipbuilders, Kinghorn.
1881, Mar. 22: William	Crockatt,	26 Nithsdale Drive, Pollokshields, Glasgow.
1872, Nov. 26: David	Cunningham,	F.R.S.E., Harbour Chambers, Dundee.

1884, Dec. 23: Peter N. Cunningham, Easter House, Kennyhill, Cumbernauld Road, Glasgow.

1869, Jan. 20: James Currie, 16 Bernard Street, Leith.

1893, Apr. 25: Thomas Daniels, Nasmyth, Wilson & Co., Ltd., Patricroft, near Manchester.

1888, Jan. 24: John Darling, 34 Queen Square, Glasgow.

G. 1881, Mar. 22: } David Davidson, 17 Regent Park Square,
M. 1888, Dec. 18: } Strathbungo, Glasgow.

1861, Dec. 11: Thomas Davison, 248 Bath Street, Glasgow.

1869, Feb. 17: James Deas, Engineer, Clyde Trust Crown Gardens, Glasgow.

1882, Dec. 19: J. H. L. Van Deinse 34 Binnenkant, Amsterdam.

1883, Nov. 21: James Denholm, 5 Derby Terrace, Sandyford Street, Glasgow.

G. 1883, Dec. 18: } William Denholm, Meadowside Shipbuilding
M. 1893, Nov. 21: } Yard, Partick, Glasgow.

1888, Feb. 21: Archibald Denny, Braehead, Dumbarton.

1887, Oct. 25: James Denny, Engine Works, Dumbarton.

Peter *Denny, LL.D., F.R.S.E., Helenslee, Dumbarton.

1888, Feb. 21: Peter Denny, Jun., Bellfield, Dumbarton.

1878, Mar. 19: Frank W. Dick, Palmer's Steel Works, Jarrow-on-Tyne.

1890, Nov. 19: B. Gillespie Dickson, c/o J. T. Sellar, 8 Blackfriars Street, Perth.

G. 1873, Dec. 24: } James S. Dixon, 97 Bath Street, Glasgow.
M. 1878, Jan. 22: }

1871, Jan. 17: William Dobson, The Chesters, Jesmond, Newcastle-on-Tyne.

1864, Jan. 20: James Donald, Abbey Works, Paisley.

1892, Nov. 22: Robert Hanna Donald, Abbey Works, Paisley.

1876, Jan. 25: James	Donaldson,	Almond Villa, Renfrew.
1886, Nov. 23: Patrick	Doyle, F.R.S.E.,	19 Lall Bazar St., Calcutta.
1890, Apr. 29: Alexander	Drew,	A. & J. Main & Co., Possilpark, Glasgow.
1884, Dec. 23: John W.W.	Drysdale,	46 Circus Drive, Glasgow.
1882, Oct. 24: Chas. R.	Dubs,	Glasgow Locomotive Works, Glasgow.
G. 1886, Nov. 23: / M. 1894, Mar. 20: George F.	Duncan,	Ardenclutha, Port-Glasgow.
1886, Nov. 23: John	Duncan,	Ardenclutha, Port-Glasgow.
1881, Jan. 25: Robert	Duncan,	Whitefield Engine Works, Govan, Glasgow.
1873, Apr. 22: Robert	Dundas, (*Past President.*)	3 Germiston Street, Glasgow.
1869, Nov. 23: David Jno.	Dunlop, (*Vice-President.*)	Inch Works, Port-Glasgow.
1877, Jan. 23: John G.	Dunlop,	J. & G. Thomson, Clydebank, Dumbartonshire.
1880, Mar. 23: Hugh S.	Dunn,	Earlston Villa, Caprington, Kilmarnock.
1886, Oct. 26: Peter	Dunn,	1218 Hyde Street, San Francisco, U.S.A.
1883, Oct. 23: Henry	Dyer, D.Sc., M.A.,	8 Highburgh Terrace, Dowanhill, Glasgow.
1885, Feb. 24: Francis	Elgar, LL.D., F.R.S.E.,	Fairfield Shipbuilding and Engineering Co., Ltd., 113 Cannon St., London, E.C.
1894, Apr. 24: Wallace	Fairweather,	62 St. Vincent St., Glasgow.
G. 1869, Nov. 23: / M. 1878, Mar. 19: John	Ferguson,	Shipbuilder, Leith.
1889, Oct. 22: Peter	Ferguson,	Phœnix Works, Paisley.

G. 1885, Jan. 27: M. 1894, Mar. 20:	William D.	Ferguson,	Albert Villa, Ravenhill Road, Belfast.
1874, Feb. 24:	Immer	Fielden,	2 Thornton Villas, Holderness Road, Hull.
1880, Jan. 27:	Alexander	Findlay,	Parkneuk Iron Works, Motherwell.
G. 1873, Dec. 23: M. 1884, Nov. 25:	E. Walton	Findlay,	Ardeer, Stevenston.
1884, Dec. 23:	Finlay	Finlayson,	Muirend Cottage, Dundyvan, Coatbridge.
1894, Jan. 23:	Andrew E.	Fleming,	Kandy, Ceylon.
G. 1869, Oct. 26: M. 1892, Nov. 22:	F. P.	Fletcher,	46 Buccleuch St., Glasgow.
1872, Nov. 26:	Thomas	Forrest,	599 Alexandra Parade, Glasgow.
1883, Dec. 18:	Lawson	Forsyth,	10 Grafton Sq., Glasgow.
1870, Jan. 18:	William	Foulis,	Engineer, Corporation Gas Works, City Chambers, Glasgow.
1880, Nov. 2:	Samson	Fox,	Leeds Forge, Leeds.
1893, Dec. 19:	William	Fraser,	11 Bothwell St., Glasgow.
1879, Nov. 25:	John	Frazer,	P. Henderson & Co., 15 St. Vincent Place, Glasgow.
1858, Nov. 24:	James M.	Gale, (*Past President; Member of Council, and Honorary Treasurer.*)	Engineer, Corporation Water Works, City Chambers, Glasgow.
1893, Jan. 24:	William M.	Gale,	18 Huntly Gardens, Kelvinside, Glasgow.
1887, Oct. 25:	Lewis P.	Garrett,	157 Hope Street, Glasgow.
1888, Mar. 20:	Ernest	Gearing,	Leeds Forge, Leeds.
1888, Dec. 18:	E. W.	Gemmell,	Board of Trade Offices, 7 York Street, Glasgow.
G. 1873, Dec. 23: M. 1882, Mar. 21:	Andrew	Gibb,	30 South Street, Greenwich, London, S.E.

1886, Nov. 23:	Paterson	Gifford,	101 St. Vincent Street, Glasgow.
1859, Nov. 23:	Archibald	*Gilchrist,	5 Montgomerie Crescent, Glasgow.
G. 1866, Dec. 26: M. 1878, Oct. 29:	James	Gilchrist,	Stobcross Engine Works, FinniestonQuay,Glasgow.
G. 1874, Feb. 24: M. 1891, Mar. 24:	James	Gillespie,	21 Minerva St., Glasgow.
G. 1884, Dec. 23: M. 1893, Feb. 21:	D. C.	Glen,	Ingleston Foundry, Greenock.
1866, Mar. 28:	Gilbert S.	Goodwin,	Alexandra Buildings,James Street, Liverpool.
1868, Mar. 11:	Joseph	Goodfellow,	3 Towerhill Terrace,Springburn, Glasgow.
1882, Apr. 25:	H. Garrett	Gourlay,	Dundee Foundry, Dundee.
1893, Apr. 25:	David R.	Graham,	Messrs A. Stephen & Son, Engine Department,Linthouse, Govan, Glasgow.
1858, Mar. 12:	George	Graham,	Engineer, Caledonian Railway, Glasgow.
1876, Jan. 25:	Thomas M.	Grant,	11 India Street, Glasgow.
1862, Jan. 8:	James	Gray,	Pathhead Colliery, New Cumnock, Ayrshire.
1881, Dec. 20:	L. John	Groves,	Engineer, Crinan Canal, Ardrishaig.
1881, Jan. 25:	William	Hall,	Shipbuilder, Aberdeen.
1876, Oct. 24:	David	Halley,	Burmeister & Wain, Copenhagen, Denmark.
G. 1874, Feb. 24: M. 1885, Nov. 24:	Archibald	Hamilton,	New Dock Works, Govan, Glasgow.
G. 1873, Dec. 23: M. 1881, Nov. 22:	David C.	Hamilton,	Clyde Shipping Co., 21 Carlton Place, Glasgow
G. 1866, Dec. 26: M. 1873, Mar. 18:	James	Hamilton, Jun.,	R. Napier & Sons, Govan.

	John	*Hamilton,	22 Athole Gardens, Glasgow.
G. 1869, Nov. 23: M. 1875, Feb. 23:	J. B.	Hamond,	Sparthfield, Bromley, Kent.
1890, Jan. 21:	Peter	Hampton,	Workman, Clark & Co., Belfast.
G. 1880, Nov. 2: M. 1884, Jan. 22:	Bruce	Harman,	Mossbank Villa, Lenzie.
G. 1874, Feb. 24: M. 1880, Nov. 23:	C. R.	Harvey,	6 Park Quadrant, Glasgow.
1887, Feb. 22:	John H.	Harvey,	Benclutha, Port-Glasgow.
1864, Nov. 23:	John	Hastie,	Kilblain Engine Works, Greenock.
1871, Jan. 17:	William	Hastie,	Kilblain Engine Works, Greenock.
1879, Nov. 25:	A. P.	†Henderson,	30 Lancefield Quay, Glasgow.
1888, Dec. 18:	J. Bailie	Henderson,	Govt. Hydraulic Engineer, Brisbane, Queensland.
1873, Jan. 21:	John	†Henderson,	Meadowside, Partick, Glasgow.
1879, Nov. 25:	John L.	†Henderson,	———
1878, Dec. 17:	William	Henderson,	Meadowside, Partick, Glasgow.
1870, May 31:	Richard	Henigan,	Alma Road, Avenue, Southampton.
G. 1881, Oct. 25: M. 1887, Oct. 25:	Charles G.	Hepburn,	Consulting Engineer, 169 King Street, Sydney.
1877, Feb. 20:	George	Herriot,	Board of Trade Offices, 7 York Street, Glasgow.
1890, Oct. 28:	W. Scott	Herriot,	Zeeburg House, West Coast, Demerara.
1892, Nov. 22:	Edward P.	Hetherington,	3 Westminster Gdns., Hillhead, Glasgow.
1888, Dec. 18:	Wm. Seymour	Hide,	Engine Department, West Cowes, Isle of Wight.

1880, Nov. 2:	Charles P. Hogg, *(Member of Council.)*	175 Hope Street, Glasgow.
1883, Mar. 20:	John Hogg,	Victoria Engine Works, Airdrie.
1880, Mar. 23:	F. G. Holmes,	109 Bath Street, Glasgow.
1883, Mar. 20:	Matthew Holmes, *(Member of Council.)*	Netherby, Lenzie.
1894, Apr. 24:	A. Campbell Holms,	3 Athole Gardens, Glasgow.
1890, Mar. 25:	Colin †Houston,	Harbour Engine Works, 60 Portman Street, Glasgow.
1888, Mar. 20:	Robert Houston,	13 Craignethan Gardens, Partick, Glasgow.
Original:	James Howden,	8 Scotland Street, Glasgow.
1891, Dec. 22:	James Howden Hume,	38 Keir St., Pollokshields, Glasgow.
Original:	Edmund *Hunt,	87 St. Vincent St., Glasgow.
G. 1886, Oct. 26: / M. 1889, Nov. 19:	Gilbert M. Hunter,	Town Engineer, New Amsterdam, Berbice, British Guiana.
1881, Jan. 25:	James Hunter,	Aberdeen Iron Works, Aberdeen.
1891, Feb. 24:	Joseph Gilbert Hunter,	342 Argyle Street, Glasgow.
G. 1873, Dec. 23: / M. 1885, Nov. 24:	Guybon Hutson,	Kelvinhaugh Engine Works, Glasgow.
1893, Mar. 21:	Guybon Hutson, Jr.,	Kelvinhaugh Engine Works, Glasgow.
1861, May 1:	John Inglis, *(President.)*	Point House Shipyard, Glasgow.
G. 1883, Jan. 23: / M. 1891, Nov. 24:	J. Anthony Inglis,	10 Kingsborough Gardens, Kelvinside, Glasgow.
1891, Apr. 28:	William Inglis,	Lochside House, Hamilton.
1890, Feb. 25:	William Ireland,	7 Ardgowan Terrace, Glasgow.

1889, Jan. 22: John	Irving,	Avenue End, Cardross.
1893, Nov. 21: Alexander	Jack,	DellburnWorks,Motherwell.
1890, Apr. 29: C. J.	Jackaman,	Slough, Bucks, England.
1891, Mar. 24: Peter	Jackson,	Consulting Engineer, 67 Hope Street, Glasgow.
1875, Dec. 21: William	Jackson,	Govan Engine Works, Govan, Glasgow.
1889, Mar. 26: Prof. Andw. (*Member of Council.*)	Jamieson,	F.R.S.E., The Glasgow and West of Scotland Technical College, Bath St., Glasgow.
1892, Oct. 25: Llewellen	Jones,	Plantation Non Pareil, Demerara.
1891, Oct. 27: Andrew	Johnston,	Bank Buildings, Hong Kong.
1879, Feb. 25: David	Johnston,	Eden Villa, Govan, G'gow.
1883, Jan. 23: F. C.	Kelson,	AngraBank,WaterlooPark, Waterloo, Liverpool.
G. 1883, Feb. 20: } M. 1892, Oct. 25: }	Ebenezer D. Kemp,	25 Grove Road, Rockferry, Birkenhead.
1875, Nov. 23: William	Kemp,	49 Jamaica St., Glasgow.
1878, Mar. 19: Hugh	Kennedy,	Redclyffe, Partickhill, Glasgow.
1877, Jan. 23: John	Kennedy,	R. M'Andrew & Co., Suffolk House, Laurence Pountney Hill, London, E.C.
1891, Dec. 22: Rankin	Kennedy,	Clifton Villas, 1 Camden Square, London.
1876, Feb. 22: Thomas	Kennedy,	Water Meter Works, Kilmarnock.
1894, Apr. 24: William	Kennedy,	13 Victoria Cres., Dowanhill, Glasgow.
1890, Jan. 21: Alexander	Kidd,	342 Argyle St., Glasgow.

1893, Feb. 21:	John	King,	Tigh Ruadh, Possilpark, Glasgow.
G. 1886. Dec. 21: / M. 1894, Mar. 20:	Donald	King,	Astilleros del Nervion, Bilbao, Spain.
1879, Dec. 23:	John G.	Kinghorn,	Tower Buildings, Water Street, Liverpool.
1885, Nov. 24:	Frank E.	†Kirby,	Detroit, U.S., America.
Original:	David	*Kirkaldy,	Testing and Experimenting Works, 99 Southwark Street, London, S.E.
1885, Jan. 27:	Charles A.	Knight,	21 Bothwell St., Glasgow.
1880, Mar. 23:	Frederick	Krebs,	18 Fredericiagade, Copenhagen, Denmark.
1891, Jan. 27:	James A.	Lade,	Glenburn Villa, Port-Glasgow.
1884, Mar. 25:	John	Laidlaw,	98 Dundas Street, S.S., Glasgow.
1862, Nov. 26:	Robert	Laidlaw,	147 East Milton Street, Glasgow.
1880, Mar. 20:	Andrew	Laing,	5 Oswald Gardens, Scotstounhill, Glasgow.
1875, Oct. 26:	William	Laing,	17 M'Alpine St., Glasgow.
1880, Feb. 24:	James	Lang,	°/₀ George Smith & Sons, City Line, 75 Bothwell Street, Glasgow.
1884, Feb. 26:	John	Lang, Jun.,	Church Street, Johnstone.
1888, Feb. 21:	George B.	Laurence,	Clutha Iron Works, Paisley Road, Glasgow.
1893, Apr. 25:	Jas. T. G.	Leslie,	21 Kelvingrove St., Glasgow.
1891, Feb. 24:	William	Leslie,	28 Wilton Gardens, Glasgow.
G. 1873, Dec. 23: / M. 1876, Oct. 24:	Charles C.	Lindsay,	167 St. Vincent St., Glasgow.
1893, Feb. 21:	William T.	Lithgow,	Port-Glasgow.

1884, Feb. 26: John	List,	3 St. John's Park, Blackheath, London, S.E.
1862, Apr. 2: H. C.	Lobnitz,	Renfrew.
1889, Dec. 17: Alfred E.	Lonergan,	Whitefield Engine Works, Govan, Glasgow.
1888, Feb. 21: Hugh D.	Lusk,	Rosebank, Greenock.
1885, Oct. 27: John	Lyall,	69 St. Vincent Crescent, Glasgow.
1858, Feb. 17: David	M'Call,	160 Hope Street, Glasgow.
1874, Mar. 24: Hector	MacColl,	Strandtown, Belfast.
Hugh	*MacColl,	Manager, Wear Dock Yard, Sunderland.
G. 1881, Dec. 20: } Hugo M. 1889, Oct. 22: }	MacColl,	Fabrica de Portilla, White & Co., Sevilla, Spain.
1883, Oct. 23: James	M'Creath,	208 St. Vincent Street, Glasgow.
1871, Jan. 17: David	M'Culloch,	Vulcan Works, Kilmarnock.
1891, Jan. 27: Frank	M'Culloch,	Chief Builder, Her Majesty's Royal Indian Marine Dockyard, Kidderpore, Calcutta.
1884, Feb. 26: James	M'Ewan,	Cyclops Foundry, 50 Peel Street, London Road, Glasgow.
1891, Jan. 27: Joseph	M'Ewan,	35 Houldsworth St., Glasgow.
G. 1874, Feb. 24: } George M. 1885, Nov. 24: }	M'Farlane,	121 West George St., Glasgow.
1880, Nov. 2: James W.	Macfarlane,	12 Balmoral Villas, Cathcart, Glasgow.
1886, Oct. 26: Walter	Macfarlane,	12 Lynedoch Cres., Glasgow.

G. 1886, Dec. 21: M. 1891, Apr. 28:	J. Grant	M'Gregor,	Canadian Pacific Railway Engineering Department, Montreal.
1886, Jan. 26:	Thomas	M'Gregor,	10 Mosesfield Terrace, Springburn, Glasgow.
1894, Feb. 20:	Donald	M'Intosh,	Dunglass, Bowling.
1887, Nov. 22:	Hugh	M'Intyre,	128 Victoria St., Partick, Glasgow.
1887, Apr. 6:	Edward	Mackay,	8 George Square, Greenock.
1893, Apr. 25:	John	M'Kenzie,	128 South Portland Street, Glasgow.
1881, Mar. 22:	William A.	Mackie,	Falkland Bank, Partickhill, Glasgow.
G. 1882, Dec. 19: M. 1894, Mar. 20:	Allan	M'Keand,	17 Queen Margaret Drive, Kelvinside, Glasgow.
1888, Apr. 24:	James	M'Kechnie,	Engine Department, Astilleros del Nervion, Bilbao, Spain.
1892, Feb. 23:	John F.	MacLaren, B.Sc.,	Eglinton Foundry, Canal Street, Glasgow.
G. 1880, Nov. 2: M. 1885, Dec. 22:	Robert	MacLaren,	Eglinton Foundry, Canal Street, Glasgow.
1891, Apr. 28:	Prof. Alex.	MacLay, B.Sc.,	Clairinch, Milngavie.
	Sir Andw.	*Maclean,	Viewfield House, Partick, Glasgow.
1886, Dec. 21:	William T.	†Maclellan,	Clutha Iron Works, G'gow
1890, Feb. 25:	Robert	M'Master,	Linthouse, Glasgow.
	William	*MacMillan,	1 Foremount Ter., Partick, Glasgow.
1884, Dec. 23:	John	M'Neil,	Helen St., Govan, Glasgow.
1883, Jan. 23:	James	M'Ritchie,	Singapore.
1891, Mar. 24:	William	M'Whirter, (*Member of Council.*)	1 Osbourne Place, Govan.
1875, Dec. 21:	George	Mathewson,	Bothwell Works, Dunfermline.

1884, Apr. 22:	Henry A.	Mavor,	57 West Nile St., Glasgow.
1876, Jan. 25:	William W.	May,	5 Edelweiss Terrace, Partickhill, Glasgow.
1887, Jan. 25:	Henry	Mechan,	13 Montgomerie Quadrant, Glasgow.
1891, Oct. 27:	Samuel	Mechan,	5 Kelvingrove Terrace, Glasgow.
G. 1876, Oct. 24: / M. 1882, Nov. 28:	James	Meldrum,	3 Elmbank Street, Glasgow.
1883, Jan. 23:	William	Melville,	Engineer, Glasgow & South-Western Railway, St. Enoch Square, Glasgow.
1881, Mar. 22:	William	Menzies,	7 Dean Street, Newcastle-on-Tyne.
G. 1832, Jan. 24: / M. 1890, Oct. 28:	R. A.	Middleton,	23 Kensington Terrace, Ibrox, Glasgow.
G. 1873, Dec. 23: / M. 1881, Nov. 22:	John F.	Miller,	Greenoakhill, Broomhouse.
Original:	James B.	Mirrlees,	45 Scotland St., Glasgow.
1886, Jan. 26:	Alexander	Mitchell,	Hayfield House, Springburn.
1888, Nov. 20:	Thomas	Mitchell,	284 Maxwell Road, Pollokshields, Glasgow.
1876, Mar. 21:	James	Mollison, (*Member of Council.*)	6 Hillside Gardens, Partickhill.
1869, Dec. 21:	John	Montgomerie,	210 Great Northern Ter., Possilpark, Glasgow.
1883, Nov. 21:	Joseph	Moore,	18 Upper Woburn Place, London.
1862, Nov. 26:	Ralph	Moore,	13 Clairmont Gardens, Glasgow.
1891, Jan. 27:	Robert T.	Moore, B.Sc.,	13 Clairmont Gardens, Glasgow.
1888, Mar. 20:	William	Morison,	41 St. Vincent Crescent, Glasgow.

G. 1878, Dec. 17: M. 1883, Jan. 23:	Robert	Morton,	21 Bothwell St., Glasgow.
1892, Feb. 23:	Robert	Motion,	J. & P. Coats, Paisley.
1885, Mar. 24:	Edmund	Mott,	Board of Trade Surveyor, 7 York Street, Glasgow.
1891, Nov. 24:	Montague B.	Mountain,	4 Regent Terr., Newcastle-on-Tyne.
1864, Feb. 17:	Hugh	Muir,	7 Kelvingrove Terrace, Glasgow.
1882, Jan. 24:	John G.	†Muir,	———
1882, Dec. 19:	Robert D.	Munro,	Engineer, Scottish Boiler Insurance Co., 13 Dundas Street, Glasgow.
Original:	James	Murdoch,	Shipbuilder, Port-Glasgow.
1880, Jan. 27:	William	Murdoch,	11 Bothwell St., Glasgow.
G. 1878, May 14: M. 1889, Nov. 19:	Angus	Murray,	Strathray, Dumbreck.
1886, Jan. 26:	James	Murray,	94 Washington St., G'gow.
1892, Feb. 23:	Robert	Murray,	28 Waterhouse Lane, Hull.
1891, Dec. 22:	Thomas Blackwood	Murray,	B.Sc., Heavyside, Biggar.
1881, Jan. 25:	Henry M.	Napier,	Shipbuilder, Yoker, near Glasgow.
1857, Dec. 23:	John	†*Napier,	C. Audley Mansions, Grosvenor Square, London.
1881, Dec. 20:	Robert T.	†Napier, (*Member of Council.*)	Shipbuilder, Yoker, near Glasgow.
1891, Oct. 27:	Walter	Neilson,	Clydebridge Steel Works, Cambuslang.
1869, Nov. 23:	Theod. L.	Neish,	14 Belmont Crescent, Hillhead, Glasgow.
1883, Dec. 18:	Thomas	Nicol,	6 Rosevale Terrace, Partick, Glasgow.
1884, Dec. 23:	Wm. H.	Nisbet,	c/o Dr Hood, 291 Elizabeth Street, Sydney, N.S.W.

1887, Apr. 6: William	Nish,	Anchor Line Offices, 7 Bowling Green, New York.
1876, Dec. 19: Richard	Niven,	Airlie, Ayr.
1861, Dec. 11: John	Norman,	131A St. Vincent Street, Glasgow.
1891, Jan. 27: William	O'Brien,	21 Ibrox Terrace, Govan, Glasgow.
1882, Jan. 24: Robert S.	Oliver,	Highland Railway Co., Inverness.
1860, Nov. 28: John W.	Ormiston,	Douglas Gardens, Uddingston.
1885, Mar. 24: Alex. T.	Orr,	Fletcher & Co., Tilbury Docks, Essex.
1890, Oct. 28: Heinrich	Paasch,	27 Rue d'Amsterdam, Antwerp.
1883, Nov. 21: W. L. C.	Paterson,	19 St. Vincent Crescent, Glasgow.
1887, Nov. 22: Prof. George	Paton,	Royal Agricultural College, Cirencester.
1889, Feb. 26: John	Paton,	74 Forth Street, Pollokshields, Glasgow.
1877, Apr. 24: Andrew	Paul,	Levenford Works, Dumbarton.
G. 1884, Feb. 26: / M. 1886, Dec. 21:	Matthew Paul, Jun.,	Levenford Works, Dumbarton.
1880, Nov. 2: James M.	Pearson,	John Dickie St., Kilmarnock.
G. 1873, Dec. 23: / M. 1888, Oct. 23:	Edward C. Peck,	Yarrow & Co., Poplar, London.
G. 1881, Oct. 25: / M. 1891, Oct. 27:	Wm. T. Philp,	Workman, Clark & Co., Belfast.
1887, Oct. 25: Robt. Band	Pope,	Leven Shipyard, Dumbarton.

1887, Apr. 6:	Theodor J.	Poretchkin,	Russian Imperial Navy, c/o William Clark & Co., 45 Hope Street, Glasgow.
1877, Nov. 20:	F. P.	Purvis,	Don Villa, Gourock.
1868, Dec. 23:	Henry M.	Rait,	155 Fenchurch Street, London.
1873, Apr. 22:	Richard	Ramage,	Shipbuilder, Leith.
1872, Oct. 22:	David	Rankine,	5 W. Regent St., Glasgow.
1886, Mar. 23:	John F.	Rankin,	Eagle Foundry, Greenock.
G. 1880, Nov. 2: M. 1894, Mar. 20:	Matthew	Rankin,	Fassoula Iron Works, Smyrna.
1881, Jan. 25:	Charles	Reid,	Lilymount, Kilmarnock.
1883, Nov. 21:	George W.	Reid,	Locomotive Dept., Natal Govt. Railways, Durban, Natal, South Africa.
1869, Mar. 17:	James	Reid,	Shipbuilder, Port-Glasgow.
1891, Nov. 24:	James B.	†Reid,	Chapelhill, Paisley.
G. 1873, Dec. 23: M. 1881, Nov. 22:	Charles H.	Reynolds,	Sir W. G. Armstrong, Mitchell & Co., Walker Shipyard, Newcastle on-Tyne.
1886, Apr. 27:	James	Riley,	Steel Company of Scotland, 23 Royal Exchange Sq., Glasgow.
1890, Mar. 25:	James W.	Robb,	133 Meadow Park Street, Dennistoun, Glasgow.
1876, Oct. 24:	Duncan	Robertson,	Baldroma, Ibrox, Glasgow.
1884, Apr. 22:	R. A.	Robertson,	8 Park Circus Place, Glasgow.
1863, Nov. 25:	William	Robertson,	123 St. Vincent Street, Glasgow.
1888, Apr. 24:	J. F.	Robinson,	Atlas Works, Springburn, Glasgow.
Original:	Hazltn. R.	*Robson, (*Past President.*)	14 Royal Cresct., Glasgow

1893, Mar. 21: Anderson Rodger, Glenpark, Port-Glasgow.

G. 1882, Nov. 28: } J. MacEwan Ross, Ardenlea, Lenzie.
M. 1891, Oct. 27: }

1861, Dec. 11: Richard G. Ross, 21 Greenhead St., Glasgow.

1892, Jan. 26: Fred. John Rowan, 121 West Regent Street, Glasgow.

Original: David *Rowan, 231 Elliot Street, Glasgow.
(*Past President.*)

G. 1875, Dec. 21: } James Rowan, 231 Elliot Street, Glasgow.
M. 1885, Jan. 27: } (*Member of Council.*)

1888, Dec. 18: Thomas Rowley, Board of Trade Offices, 7 York Street, Glasgow.

G. 1858, Dec. 22: } George Russell, Engineer, Motherwell.
M. 1863, Mar. 4: } (*Vice-President.*)

1881, Feb. 22: Joseph Russell, Shipbuilder, Port-Glasgow.

1890, Jan. 21: Edward Mowbray Salmon, 2 White Lion Court, Cornhill, London, E.C.

1876, Oct. 24: Peter Samson, Board of Trade Offices, Bedford St., Covent Garden, London, W.C.

1885, Feb. 24: James Samuel, Jun., 185 Kent Road, Glasgow.

1883, Feb. 20: John Sanderson, Lloyd's Register, 342 Argyle Street, Glasgow.

1892, Oct. 25: Wm. Brooks Sayers, Glenwood, Bearsden.

G. 1879, Mar. 25: } John †Scobie, c/o Sen. Pouchard, M'Taggart, Lother, & Co., F.C. de Antioquia, Puerto Berrio Ria Magdalena, U. S. of Columbia.
M. 1888, Oct. 23: }

1882, Dec. 19: Prof. Jas. Scorgie, Poona Villa, King's Gate, Aberdeen.

1893, Apr. 25: James Scott, Yloilo, Philippine Islands.

1872, Jan. 30: James E. Scott, 52 Coal Exchange, London.

1881, Jan. 25: John	Scott,	Whitebank Engine Works, Kirkcaldy.
1893, Nov. 21: John	Scott,	Engineer, New Zealand Refrigeration Company, Omaru, N.Z.
1860, Nov. 28: Thos. B.	*Seath,	42 Broomielaw, Glasgow.
1875, Jan. 26: Alexander	Shanks,	Belgrade, Aytoun Road, Pollokshields, Glasgow.
1892, Apr. 26: Alexander	Shanks, Jun.,	43 Aytoun Road, Pollokshields, Glasgow.
1889, Mar. 26: John W.	Shepherd,	Carrickarden, Bearsden.
1858, Nov. 24: William	Simons,	Tighnabruaich, Argyleshire.
1862, Jan. 22: Alexander	Simpson,	175 Hope Street, Glasgow.
1887, Jan. 25: Robert	Simpson, B.Sc.,	175 Hope St., Glasgow.
G. 1877, Mar. 20: Nisbet M. 1887, Dec. 20:	Sinclair,	The Wm. Cramp & Sons' Ship and Engine Building Co., Philadelphia, U.S.A.
G. 1884, Mar. 25: Russell M. 1891, Mar. 24:	Sinclair,	Consulting Engineer, 97 Pitt St., Sydney, N.S.W.
G. 1882, Nov. 28: Geo. H. M. 1889, Oct. 22:	Slight, Jun.,	c/o Jas. Slight, 131 West Regent Street, Glasgow.
1880, Nov. 2: Alexander D.	Smith,	5 Belmar Terrace, Shields Road, Pollokshields, Glasgow.
1871, Dec. 11: Hugh	Smith,	9 Kelvinside Terrace, N., Glasgow.
1888, Oct. 23: James	Smith,	Orange Grove Estate, Tacarigua, Trinidad, B.W.I.
1892, Nov. 22: William	Smith,	Eglinton Engine Works, Glasgow.
1870, Feb. 22: Edward	Snowball,	Engineer, Hyde Park Locomotive Works, Springburn, Glasgow.
1887, Jan. 25: Peter A.	Somervail,	Dalmuir Ironworks, Dalmuir.

1883, Dec. 18: Alex. E. †Stephen, 9 Princes Gardens, Dowanhill, Glasgow.

John †*Stephen, Linthouse, Govan, Glasgow.

1894, Jan. 23: William Steven, 18 Sandyford Place, Glasgow.

1894, Jan. 23: Alex. W. Stewart, Crescent, Dalmuir.

1890, Feb. 25: Andrew Stewart, 41 Oswald St., Glasgow.

1867, Jan. 30: Duncan Stewart, 47 Summer Street, Glasgow.

1890, Mar. 25: James †Stewart, Harbour Engine Works, 60 Portman Street, Glasgow.

1892, Mar. 22: John Graham Stewart, B.Sc., 17 Park Terrace, Glasgow.

1874, Oct. 27: Peter Stewart, 53 Renfield Street, Glasgow.

G. 1873, Dec. 23: } W. B. Stewart, 10 Buckingham Terrace,
M. 1882, Oct. 24: } Hillhead, Glasgow.

Original: Patrick Stirling, The Great Northern Railway, Doncaster.

1893, Apr. 25: C. E. Stromeyer, Lloyd's Register, 342 Argyle Street, Glasgow.

1889, Oct. 22: James Stuart, 115 Wellington St., Glasgow.

1877, Jan. 23: James Syme, 8 Glenavon Ter., Partick, Glasgow.

1879, Oct. 28: James Tait, County Buildings, Wishaw.

1885, Apr. 28: Peter Taylor, Dock Shipbuilding Yard, Port-Glasgow.

1879, Mar. 25: Staveley Taylor, Russell & Co., Shipbuilders, Greenock.

1873, Dec. 23: E. L. Tessier, Veritas Office, 29 Waterloo Street, Glasgow.

1885, Jan. 27: George W. Thode, 21 Bothwell Street, Glasgow.

1889, Feb. 26: John Thom, 93 Hope Street, Glasgow.

1887, Apr. 26: Prof. Arthur W. Thomson, D.Sc., College of Science, Poona, India.

1893, Oct. 24: G. Caldwell Thomson, 18 Mühlen Strasse, Riga, Russia.

1882, Apr. 25: Geo. P. Thomson, Clydebank, Dumbartonshire.

1883, Dec. 18: George Thomson, 9 Buckingham Ter., Partick, Glasgow.

G. 1874, Feb. 24: } George C. Thomson, 23 Kersland Terrace, Hillhead, Glasgow.
M. 1889, Oct. 22: }

1886, Mar. 23: James Thomson, M.A., 22 Wentworth Place, Newcastle-on-Tyne.

1868, Feb. 12: James M. Thomson, 36 Finnieston St., Glasgow.

1882, Mar. 21: James R. Thomson, Clydebank, Dumbartonshire

1868, May 20: John Thomson, 3 Crown Terrace, Dowanhill, Glasgow.

1864, Feb. 17: W. R. M. Thomson, 96 Buchanan St., Glasgow.

1878, May 14: W. B. Thompson, Ellengowan, Dundee.

G. 1887, Jan. 25: } David R. Todd, Union Foundry, Kidsgrove, Stoke-on-Trent.
M. 1892, Oct. 25: }

1876, Nov. 21: Alexander Turnbull, St. Mungo's Works, Bishopbriggs, Glasgow.

1875, Nov. 23: John Turnbull, Jun., Consulting Engineer, 18 Blythswood Sq., Glasgow.

1892, Jan. 26: John Wallace, 12 Kelvingrove Street, Glasgow.

1883, Jan. 23: Peter Wallace, Ailsa Shipbuilding Co., Troon.

1885, Mar. 24: W. Carlile Wallace, Castle Shipyard, Port-Glasgow.

1886, Jan. 26: John Ward, Leven Shipyard, Dumbarton.

1893, Dec. 19: Prof. W. H. Watkinson, 24 Albion Crescent, Dowanhill, Glasgow.

1875, Mar. 23: G. L. Watson, 108 W. Regent St., Glasgow.

1864, Mar. 16: Sir W. Renny Watson, 16 Woodlands Ter., G'gow.

G. 1875, Dec. 21: M. 1886, Oct. 26:	R. G.	Webb,	Richardson & Cruddas, Byculla, Bombay.
G. 1878, Dec. 17: M. 1887, Nov. 22:	Prof. R. L.	Weighton, M.A.,	Durham College of Science, Durham.
1874, Dec. 22:	George	Weir,	18 Millbrae Cres., Langside, Glasgow.
1874, Dec. 22:	James	Weir,	Holmwood, 72 St. Andrew's Drive, Pollokshields.
G. 1876, Dec. 19: M. 1884, Feb. 26:	Thomas D.	Weir,	F.C., Central de Venezuela, Caracas, Venezuela, South America.
1889, Apr. 23:	Thomas	†Weir,	China Merchants' Steam Navigation Co., Marine Superintendent's Office, Shanghai, China.
1869, Feb. 17:	Thomas M.	Welsh,	3 Princes Gardens, Dowanhill, Glasgow.
1868, Dec. 23:	Henry H.	West,	14 Castle Street, Liverpool.
1883, Feb. 20:	Richard S.	White,	Craigmont, Pollokshields, Glasgow.
1888, Mar. 20:	George	Whitehall,	c/o Walsh, Lovett, & Co., Bombay.
1887, Apr. 6:	James	Whitehead,	6 Buchanan Ter., Paisley.
G. 1877, Jan. 23: M. 1890, Oct. 28:	Robt. John	Wight,	61 Brighton Road, Stoke Newington, London, N.
1884, Nov. 25:	John	Wildridge,	Consulting Engineer, Sydney, N.S.W., Australia.
1876, Oct. 24:	Francis W.	Willcox,	45 West Sunniside, Sunderland.
1884, Dec. 23:	James	Williamson,	Director H.M. Dockyards, Whitehall, London.
1883, Feb. 20:	Robert	Williamson,	Lang & Williamson, Engineers, &c., Newport, Mon.
1890, Dec. 23:	Robert	Williamson,	Pott, Cassels & Williamson, Motherwell.

	Alex. H.	*Wilson,	Aberdeen Iron Works, Aberdeen.
1887, Oct. 25:	David	Wilson,	Arecibo, Porto Rico, West Indies.
1889, Oct. 22:	Gavin	Wilson,	16 Robertson St., Gl'gow.
1868, Dec. 23:	James	Wilson,	Water Works, Edinburgh.
1870, Feb. 22:	John	Wilson,	165 Onslow Drive, Dennistoun, Glasgow.
G. 1883, Jan. 29: M. 1891, Feb. 24:	John	Wilson,	29 Waterloo St., Glasgow.
1858, Jan. 20:	Thomas	†*Wingate,	Viewfield, Partick, G'gow.
1888, Nov. 20:	John	Wotherspoon,	———
1891, Feb. 24:	Thos. Wm.	Wray,	Victoria Place, Knottingley, Yorkshire.
1890, Mar. 25:	William G.	Wrench,	27 Oswald St., Glasgow.
1867, Nov. 27:	John	Young,	Galbraith Street, Stobcross, Glasgow.
G. 1888, Jan. 24: M. 1894, Jan. 23:	J. Denholm	Young,	11 Grange Crescent, Sunderland.
1894, Mar. 20:	Thomas	Young,	58 Renfield St., Glasgow.
1891, Dec. 22:	John	Younger,	Overbridge, Ibrox, G'gow.

ASSOCIATES.

	Thomas	*Aitken,	8 Commercial Street, Leith.
1888, Nov. 20:	Capt. John	Bain,	4 Edelweiss Ter., Partick, Glasgow.
1883, Oct. 28:	John	Barr,	Secretary, Glenfield Co., Kilmarnock.

Names marked thus * were Associates of Scottish Shipbuilders' Association at incorporation with Institution, 1865.

Names marked thus † are Life Associates.

1882, Dec. 19: William	Begg,	Sheriff Park, Rutherglen.
1884, Dec. 23: W. S. C.	Blackley,	103 Holm Street, Glasgow.
1876, Jan. 25: John	†Brown, B.Sc.,	11 Somerset Place, Glasgow.
1865, Jan. 18: John	Bryce,	Sweethope Cottage, N. Milton Road, Dunoon.
1880, Dec. 21: John	Cassells,	Hazel Bank, 62 Glencairn Drive, Pollokshields, Glasgow.
1893, Feb. 21: William	Cassels,	Cairndhu, 12 Newark Drive, Pollokshields, Glasgow.
1885, Feb. 24: Robert	Darling,	Bankhead, Laverockbank Road, Trinity, N.B.
1863, Mar. 18: Robert	Gardner,	136 George Street, G'gow.
1891, Oct. 27: James	Galloway, Jun.,	Whitefield Works, Govan.
1860, Jan. 18: George T.	Hendry,	79 Gt. Clyde St., Glasgow.
1882, Oct. 24: Wm. A.	Kinghorn,	81 St. Vincent St., Glasgow.
1884, Feb. 26: C. R. L.	Lemkes,	194 Hope Street, Glasgow.
1892, Nov. 22: Alexander	M'Ara,	65 Morrison St., Glasgow.
1893, Jan. 24: T. W.	M'Intyre,	123 Hope Street, Glasgow.
1893, Feb. 21: William	M'Kinnel,	Clyde Steel and Iron Works, Sheffield.
1886, Jan. 26: Capt. Dun.	M'Pherson,	3 Cecil Street, Paisley Rd., W., Glasgow.
1874, Mar. 24: James B.	Mercer,	Broughton Copper Works, Manchester.
James S.	*Napier,	33 Oswald Street, Glasgow.
1889, Jan. 22: William	Rigg,	8 Grantly Place, Shawlands, Glasgow.

1894, Mar. 20:	Thomas A.	Ross,	Glenwood, Bridge-of-Weir.
1888, Jan. 24:	Samuel	Smillie,	71 Lancefield St., Glasgow.
1876, Jan. 25:	George	Smith,	75 Bothwell St., Glasgow.
	H. J.	*Watson,	5 Oswald Street, Glasgow.
1882, Dec. 19:	John D.	Young,	Scottish Boiler Insurance Co., 13 Dundas Street, Glasgow.
	William	*Young,	Galbraith Street, Stobcross, Glasgow.
1892, Jan. 26:	Alex.	Young,	53 Waterloo St., Glasgow.

GRADUATES.

1890, Mar. 25:	J. Millen	Adam,	Ibrox Works, Whitefield Road, Govan, Glasgow.
1882, Nov. 28:	William H.	Agnew,	The Royal Shipbuilding and Engineering Company, Flushing, Holland.
1888, Jan. 24:	H. Wallace	Aitken,	Netherlea, Pollokshields, Glasgow.
1888, Jan. 24:	James	Allan,	144 Buccleuch St., Glasgow.
1889, Dec. 17:	John	Anderson,	2 Holmhead Place, New Cathcart.
1893, Mar. 21:	Lawrence	Anderson,	2 Windsor Quadrant, Kelvinside, Glasgow.
1888, Oct. 23:	Donald S.	Arbuthnot,	c/o Charles Brand & Son, 172 Buchanan Street, Glasgow.
1890, Dec. 23:	Arthur S. D.	Arundel,	Penn St. Works, Hoxton, London, N.

1892, Jan. 26: Peter	Bain,	54 Glasgow Road, Dumbarton.
1894, Mar. 20: Fred. W.	Baker,	11 Doune Terrace, Glasgow.
1888, Apr. 24: Harry D.D.	Barman,	2 Gilmour Street, Byres Road, Glasgow.
1892, Nov. 22: Edmund G.	Baxter,	Caledonian Railway, 3 Germiston Street, Glasgow.
1885, Dec. 22: Peter M'L.	Baxter,	Chief Mechanical Engineer, Rio Tinto, Huelva, Spain.
1887, Apr. 26: Thomas	Bell,	35 Kersland Terrace, Hillhead, Glasgow.
1894, Feb. 20: John H.	Bell,	29 Bentinck St., Glasgow.
1894, Mar. 20: Richard	Bell,	17 Minerva St., Glasgow.
1885, Mar. 24: Alexander	Bishop,	3 Germiston Street, Glasgow.
1892, Oct. 25: John	Black,	7 Huntly Ter., Kelvinside, Glasgow.
1885, Oct. 27: Archibald	Blair,	48 Overnewton St., Glasgow.
1891, Oct. 27: Archibald	Blair, Jun.,	7 Corunna Street, Glasgow.
1892, Mar. 22: Frank R.	Blair,	232 Renfrew St., Glasgow.
1884, Jan. 22: George	Blair, Jun.,	4 Kinnoul Place, Dowanhill, Glasgow.
1885, Oct. 27: William C.	Borrowman,	53 Bentinck St., Glasgow.
1891, Dec. 22: W. D.	Bowman,	102 Hill Street, Garnethill, Glasgow.
1888, Jan. 24: Mark	Brand, B.Sc.,	Barrhill Cottage, Twechar, Kilsyth.
1883, Dec. 18: Eben. H.	Brown,	Helen St. Engine Works, Govan, Glasgow.
1888, Mar. 20: James	Brown,	San Nicholas del Puerto, Sevilla, Spain.
1881, Jan. 25: Matthew T.	Brown, B.Sc.,	194 St. Vincent Street, Glasgow.
1892, Feb. 23: Robert H.	Brown,	5 Woodville Place, Govan.

1893, Oct. 24: Johannes	Bruhn,	1 University Place, Partick, Glasgow.
1891, Jan. 27: Walter G.	Buchanan,	17 Lonsdale St., Belfast.
1891, Feb. 24: Bertram W.	Burnside,	11 Cowlairs Road, Springburn.
1890, Feb. 25: John	Buttery,	26 Granville St., Glasgow.
1890, Jan. 21: William	Caird,	25 Woodside Quadrant, Glasgow.
1891, Feb. 24: John	Calder,	1 Iona Place, Mt. Florida, Glasgow.
1891, Jan. 27: Hugh	Caldwell,	The Braes, by Kilbarchan.
1892, Oct. 25: Hugh	Cameron,	13 Franklin Ter., Glasgow.
1888, Jan. 24: Angus	Campbell,	9 John St., Southampton.
1890, Dec. 23: Wm. H.	Carslaw, Jun.,	Parkhead Boiler Works, Parkhead.
1890, Oct. 28: Robert D.	Cassells,	62 Glencairn Drive, Pollokshields, Glasgow.
1884, Feb. 26: John	Cleland, B.Sc.,	Woodhead Cottage, Old Monkland.
1893, Apr. 25: W. A.	Cleland,	Yloilo, Philippine Islands.
1891, Oct. 27: James	Cochrane,	Normal College, Capetown.
1884, Feb. 26: Alexander	Conner,	9 Scott Street, Glasgow.
1885, Dec. 22: Benjamin	Conner,	9 Scott Street, Glasgow.
1885, Oct. 27: Francis	Coutts,	25 Roslin Ter., Aberdeen.
1892, Feb. 23: George H.	Cox,	———
1892, Dec. 20: James	Craig,	35 Gardner Street, Partick, Glasgow.
1890, Oct. 28: John G.	Crookston,	Park House, Bowling, Dumbartonshire.
1886, Mar. 23: Thomas	Danks,	———
1888, Dec. 18: Harry L.	Davies,	The Vicarage, Kirkby-Lonsdale, England.
1891, Feb. 24: Henry	Deanesly,	38 Berkeley St., Glasgow.

1891, Dec. 22: Kristian S.	Dekke,	Bergen, Norway.
1883, Feb. 10: Lewis M. T.	Deveria,	c/o P. M'Intosh & Son, 129 Stockwell Street, Glasgow.
1886, Nov. 23: Thomas B.	Dick,	Post Office, Vallejo, California, U.S.A.
1888, Mar. 20: B. B.	Donald,	9 Balgray Ter., Springburn, Glasgow.
1891, Feb. 24: Patrick D.	Donald, B.Sc.,	Annandale, Kilmarnock.
1891, Feb. 24: John	Dougan,	13 Leven Street, Pollokshields, Glasgow.
1884, Jan. 22: William	Dunlop,	6 Chatsworth Terrace, Barrow-in-Furness.
1893, Feb. 21: Turner	Dunn,	20 Park Circus, Glasgow.
1885, Mar. 24: Robert	Elliot, B.Sc.,	59 Houston Road, Forrest Hill, London, S.E.
1878, Jan. 22: James R.	Faill,	7 Winton Drive, Kelvinside, Glasgow.
1880, Dec. 21: Henry M.	Fellows,	76 Southtown Road, Great Yarmouth.
1892, Oct. 25: James M.	Ferguson,	———
1888, Dec. 18: John	Ferguson,	Formans & M'Call, 160 Hope Street, Glasgow.
1881, Feb. 22: William	Ferguson,	Larkfield, Partick, Glasgow.
1891, Dec. 22: W. L.	Fergusson,	Hawcoat Lane, Abbey Rd., Barrow-in-Furness.
1891, Dec. 22: Alexander	Fergus,	7 Ibrox Place, Glasgow.
1881, Nov. 22: Charles J.	Findlay,	———
1893, Feb. 21: Louis	Findlay,	c/o Mrs Ferguson, 29 Bentinck Street, Glasgow.
1892, Nov. 22: Andrew C.	Fraser,	107 Greenhead St., Glasgow.
1886, Apr. 27: J. Imbrie	Fraser,	13 Sandyford Pl., Glasgow.

1892, Feb. 23: Norman O.	Fulton,	Woodbank, Mount Vernon.
1893, Oct. 24: Andrew	Galloway,	49 Prince's Square, Strathbungo, Glasgow.
1889, Apr. 23: Hugh	Gardner,	Minas Schwager, Coronel, Chili.
1892, Nov. 22: James G.	Glassford,	29 Cecil Road, Seaforth, Liverpool.
1885, Jan. 27: Alex. M.	Gordon,	10 Ibrox Place, Ibrox, Glasgow.
1891, Oct. 27: James	Gourlay,	11 Crown Gardens, Dowanhill, Glasgow.
1882, Jan. 24: Arthur B.	Gowan,	Wootten Villa, Abbey Rd., Barrow-in-Furness.
1884, Feb. 26: Alexander	Gracie,	Willowbank, Yoker.
1889, Feb. 26: J. E.	Harrison,	21 Westminster Ter., G'gow.
1892, Dec. 20: William	Hay,	36 Grove Street, Glasgow.
1883, Feb. 20: David	Henderson,	Cardross Bank Villa, Cardross.
1890, Dec. 23: Wm. G.	Henderson,	1 Radnor Terrace, Glasgow.
1892, Jan. 26: Wm. M'L.	Homan,	6 Buckingham Buildings, Glasgow.
1891, Dec. 22: George	Howson,	8 Park Ter., Govan, Glasgow.
1885, Feb. 24: John	Inglis,	Bonnington Brae, Edinburgh.
1891, Mar. 24: Harold D.	Jackson,	105 Byars Road, Partick, Glasgow.
1893, Oct. 24: Alex. J.	Kay,	38 Hill Street, Garnethill, Glasgow.
1886, Nov. 23: Daniel	Kemp,	57 St. Andrew's Road, Pollokshields, Glasgow.

1890, Oct. 28: John	Kemp,	1 Thornwood Ter., Partick, Glasgow.
1890, Oct. 28: Robert G.	Kemp,	Larkfield Villa, Sydenham, Belfast.
1893, Apr. 25: Charles A.	King, B.Sc.,	C. C. Lindsay, 167 St. Vincent St., Glasgow.
1891, Oct. 27: James	King,	Carrizal, Bago, Chili.
1886, Jan. 26: John	King,	8 Hamilton Street, Partick, Glasgow.
1888, Apr. 24: R. E.	Kinghorn,	———
1894, Feb. 20: David W.	Kinmont,	3 Germiston St., Glasgow.
1890, Oct. 28: John	Kirkwood,	Formans & M'Call, 160 Hope Street, Glasgow.
1893, Feb. 21: Robert	Laing,	Northbank, Partickhill, Glasgow.
1892, Nov. 22: Thomas W.	Lamont,	711 Cathcart Road, Govanhill, Glasgow.
1888, Nov. 20: Charles	Lang,	2 Bellevue Terrace, Cathcart, Glasgow.
1893, Dec. 19: Thomas H.	Lauder,	Parkhead Forge, Glasgow.
1887, Oct. 25: Robert	Lawrie,	4 Doune Quadrant, Kelvinside, Glasgow.
1886, Jan. 26: John	Lee,	26 Edinburgh Road, Upper Armley, Leeds.
1886, Dec. 21: Robert	Lee, Jun.,	13 Hamilton Terrace, West Partick, Glasgow.
1891, Dec. 22: Wm. Orr	Leitch, Jun.,	Cruden Railway, Ellon, Aberdeenshire.
1894, Jan. 23: Alexander	Lennox,	34 Glasgow St., Hillhead, Glasgow.
1892, Dec. 20: John	Leslie,	7 Park Terrace, Govan, Glasgow.
1883, Nov. 21: William R.	Lester,	4 Strathmore Gardens, W., Glasgow.

1885, Mar. 24: Fred.	Lobnitz,	Clarence House, Renfrew.
1893, Apr. 25: Ernest	Lyon,	Engineer's Office, Spital House, Chesterfield.
1893, Jan. 24: Archibald	M'Arthur,	145 Buccleuch St., Glasgow
1880, Nov. 2: Patrick F.	Maccallum,	Athenæum, Glasgow.
1883, Dec. 18: Peter	M'Coll,	Stewartville Place, Partick, Glasgow.
1883, Dec. 18: John	Macdonald,	6 Rupert Street, Glasgow.
1891, Oct. 27: Henry	MacEwen,	5 Cathkin Terrace, Mount Florida.
1887, Jan. 25: David L.	M'Geachen,	13 Carmichael St., Govan, Glasgow.
1883, Dec. 18: John Bow	M'Gregor,	17 Bell Street, Renfrew.
1881, Oct. 25: James	Mackenzie,	c/o D. Rollo & Sons, 10 Fulton Street, Liverpool.
1883, Jan. 23: Thos. B.	Mackenzie,	342 Duke Street, Glasgow.
1883, Feb. 26: Robert	M'Kinnell,	56 Dundas Street, S.S., Glasgow.
1891, Feb. 24: Wm.	M'Lagan,	11 Pitt Street, Glasgow.
1882, Dec. 19: Peter	M'Lean,	Waverley Ironworks, Galashiels.
1885, Jan. 27: John	M'Millan,	26 Ashton Ter., Glasgow.
1886, Dec. 21: Andrew	M'Vitae,	4 Clutha St., Paisley Road W., Glasgow.
1886, Dec. 21: James	Mack,	3 Germiston St., Glasgow.
1887, Feb. 22: Cree	Maitland,	Manager, Sunger Ujong Railway, Port Dickson, Malay Peninsula.
1885, Oct. 27: John M.	Malloch,	———
1894, Mar. 20: John Boyd	Mather,	Kirkhill, Mearns.
1889, Jan. 22: George	Menzies,	26 Minerva Street, Glasgow.
1889, Jan. 22: Robert	Menzies,	Chelmsford Hotel, Tongaat, Natal.

1889, Apr. 23: John	Miller,	Shandon Place, Govan, Glasgow.
1880, Feb. 24: Robert	Miller,	204 Stobcross Street, Glasgow.
1890, Feb. 25: Robert F.	Miller,	10 Windsor Ter., W., G'gow.
1889, Feb. 26: Sidney	Millar,	32 Annette St., Govanhill, Glasgow.
1884, Nov. 25: Thomas	Millar,	Sir W. G. Armstrong, Mitchell, & Co., Ld., Walker Shipyard, Newcastle-on-Tyne.
1883, Dec. 18: Charles W.	Milne,	5 Park Terrace, Langlands Road, Govan, Glasgow.
1881, Jan. 25: Ernest W.	Moir,	c/o S. Pearson & Son, 10 Victoria Street, Westminster, London.
1892, Nov. 22: Hector A.	Mollison,	6 Hillside Gdns., Partickhill, Glasgow.
1882, Feb. 21: C. J.	Morch,	Horten, Norway.
1889, Dec. 17: Arthur M.	Morrison,	Laurel Bank, Partick, Glasgow.
1892, Jan. 26: James H.	Muir,	140 Bath Street, Glasgow.
1891, Apr. 28: Wm.	Muirhead,	Cloberhill, Maryhill, Glasgow.
1892, Nov. 22: Ernest C.	Mumme,	3 Germiston St., Glasgow.
1893, Feb. 21: Richard	Munro,	111 Hill Street, Garnethill, Glasgow.
1892, Oct. 25: John A.	Murdoch,	7 Park Circus Pl., Glasgow.
1893, Oct. 24: B. Stewart	Murphy,	c/o Mr H. Hogarth, 12 Great Clyde Street, Glasgow.
1887, Dec. 20: David	Myles,	Northumberland Engine Works, Wallsend-on-Tyne.
1892, Jan. 26: John S.	Napier,	6 Windsor Cir., Kelvinside, Glasgow.

1886, Jan. 26: Thomas	Nicholson,	6 Annfield Place, Glasgow.
1891, Dec. 22: Hugh	Osborne,	30 Rose Street, Garnethill, Glasgow.
1891, Dec. 22: Marshall	Osborne,	55 Cecil St., Hillhead, Glasgow.
1888, Jan. 24: James V.	Paterson,	307 Walnut Street, Philadelphia, U.S.A.
1879, Nov. 25: Alex. R.	Paton,	Lloyd's Register of Shipping, Dock Office Buildings, West Hartlepool.
1892, Dec. 20: Thomas	Paton,	1 Fairley Street, Govan, Glasgow.
1886, Jan. 26: Samuel	Paxton,	5 Lorne Terrace, Pollokshields, Glasgow.
1887, Nov. 22: James	Peacock,	5 Wilton Gardens, Glasgow.
1891, Jan. 27: Gilbert F.	Pollock,	1 Barr Street (East), London Road, Glasgow.
1887, Apr. 6: John C.	Preston,	Assistant Engineer, Brisbane Board of Water Works, Brisbane, Queensland.
1893, Oct. 24: William S.	Pringle,	64 Dee Street, Aberdeen.
1885, Jan. 27: James L.	Proudfoot,	Lanemark, New Cumnock.
1886, Dec. 21: Andrew T.	Reid,	10 Woodside Terrace, Glasgow.
1887, Oct. 25: David H.	Reid,	Attiquin, Maybole.
1884, Dec. 23: James G.	Reid,	Renfield House, Renfrew.
1886, Dec. 21: John	Reid,	10 Woodside Ter., Glasgow.
1884, Feb. 26: Walter	Reid,	118 Ingleby Drive, Glasgow.
1894, Jan. 23: James	Richmond,	13 Sutherland Terrace, Hillhead, Glasgow.
1894, Jan. 23: John H.	Richmond,	259 Renfrew St., Glasgow.

1886, Oct. 26: Alexander	Robertson,	41 Darnley Street, Pollokshields, Glasgow.
1892, Nov. 22: Andrew R.	Robertson,	8 Park Circus Pl., Glasgow.
1890, Oct. 28: Edward F.	Robertson,	62 High Street, Galashiels.
1887, Dec. 20: Matthew	Robin,	Castle Hill, Hamilton.
1891, Nov. 24: James	Russell,	Belmont, Uddingston.
1891, Dec. 22: James	Russell,	16 Rocklea Ter., Hillhead.
1887, Apr. 6: Joseph W.	Russell,	Kilblain Engine Works, Greenock.
1888, Feb. 21: Leslie S.	Robinson,	Victoria Mansion, 28 Victoria St., London, S.W.
1892, Apr. 26: Walter	Robb,	332 Duke Street, Glasgow.
1888, Jan. 24: John A.	Rudd,	128 Hope Street, Glasgow.
1893, Dec. 19: Herbert C.	Sadler, B.Sc.,	2 Minard Terrace, Partickhill, Glasgow.
1885, Oct. 27: Alexander	Scobie,	Culdees, Partickhill, Glasgow.
1886, Mar. 23: Thomas R.	Seath,	Sunny Oaks, Langbank.
1886, Mar. 23: William Y.	Seath,	Sunny Oaks, Langbank.
1880, Apr. 27: Archibald	Sharp,	13 Fairlawn Grove, Chiswick, London, W.
1882, Oct. 24: John	Sharp,	147 East Milton St., Glasgow.
1894, Apr. 24: John J.	Shaw,	12 Lynedoch Pl., Glasgow.
1892, Dec. 20: Wm. David	Shields,	164 Renfrew St., Garnethill, Glasgow.
1893, Dec. 19: Thomas S.	Shute,	34 Hayburn Cres., Partickhill, Glasgow.
1892, Dec. 20: David C.	Simpson,	Westburn Place, Whiteinch, Glasgow.
1891, Nov. 24: Alex.	Smith,	5 Matilda Terrace, Strathbungo, Glasgow.
1892, Dec. 20: James	Smith,	20 Dumbarton Road, Glasgow.

1894, Apr. 24: Charles	Smith,	8 Muirpark Gdns., Partick.
1892, Oct. 25: William	Spalding,	532 St. Vincent St., Glasgow.
1891, Dec. 22: James	Stark,	Summerlea, Thornliebank.
1894, Mar. 20: William B.	Stearns,	11 Doune Terrace, Kelvinside, Glasgow.
1892, Jan. 26: James	Steel,	239 St. Vincent St., Glasgow.
1892, Dec. 20: J. M.	Steven,	2 Hampton Court Terrace, Glasgow.
1881, Nov. 22: John A.	Steven,	12 Royal Crescent, Glasgow.
1891, Dec. 22: Clement H.	Stevens,	c/o Blandy Bros. & Co., Las Palmas, Grand Canary.
1893, Apr. 25: Archibald	Stevenson,	Yloilo, Philippine Islands.
1881, Jan. 25: William	Stevenson,	6 West View, Wallsend-on-Tyne.
1875, Dec. 21: Andrew	Stirling,	Denny & Co., Engine Works, Dumbarton.
1888, Jan. 24: Archd.	Stodart,	Netherton, Newton Mearns.
1889, Mar. 26: J. D.	Strang,	4 Victoria Drive, Crosshill, Glasgow.
1886, Dec. 21: James R.	Symington,	204 St. Vincent St., Glasgow.
1880, Dec. 21: Stanley	Tatham,	Montrose, Bromley Park, Bromley, Kent.
1882, Nov. 28: William	Taylor,	40 Derby Street, Glasgow.
1891, Mar. 24: Ambrose H.	Thomson,	Surveyors' Department, Court House, Marylebone Lane, London, W.
1880, Nov. 23: George	Thomson,	35 Marchmont Crescent, Edinburgh.
1884, Dec 23: William	Thomson,	1 University Gardens Terrace, Glasgow.

1892, Jan. 26: Frederick	Thomson,	110 Hill Street, Garnethill, Glasgow.
1891, Dec. 22: Cecil	Tickle,	131 Elder Park Terrace, Govan, Glasgow.
1885, Oct. 27: Peter	Tod,	°/₀ James Allan & Co., Engineers, Victoria Road, Liverpool.
1891, Dec. 22: Norman	Trott,	———
1891, Oct. 27: Campbell	Turnbull,	18 Blythswood Square, Glasgow.
1892, Mar. 22: James	Turnbull,	South Overdale, Langside, Glasgow.
1891, Oct. 27: W. L.	Turnbull,	18 Blythswood Square, Glasgow.
1893, Mar. 21: G. Underwood	Walker	204 St. Vincent Street, Glasgow.
1892, Jan. 26: John	Wallace, Jun.,	12 Kelvingrove Street, Glasgow.
1885, Feb. 24: Charles H.	Wannop,	Barclay, Curle & Co., Finnieston Quay, Glasgow.
1889, Oct. 22: Bruce R.	Warden,	5 Eton Gardens, Hillhead.
1881, Mar. 22: Robert	Watson,	1 Glencairn Drive, Pollokshields, Glasgow.
1892, Dec. 20: Harry	Watt,	2 Cambridge Terrace, 259 Albert Rd., Pollokshields, Glasgow.
1880, Apr. 27: Robert D.	Watt,	49 Quinsan Road, Shanghai, China.
1884, Apr. 22: John	Weir,	John Scott & Co., Abden Works, Kinghorn.
1885, Nov. 24: James	Welsh,	3 Princes Gardens, Dowanhill, Glasgow.
1882, Nov. 28: Geo. B.	Wemyss,	175 Comelypark Street, Dennistoun, Glasgow.

1892, Dec. 20:	Ernest Wm. West,	13 Leven St., East Pollokshields, Glasgow.
1883, Dec. 18:	John Whitehead,	33 Hamilton Street, Hoole, Chester.
1890, Mar. 25:	C. Basil Williams,	45 Cecil Street, Hillhead, Glasgow.
1890, Apr. 29:	George Wilson,	———
1888, Apr. 24:	Alex. Woodburn,	B.Sc., Assam-Bengal Rail, c/o Grindlay & Co., Calcutta.
1893, Dec. 19:	William Wotherspoon,	Blytholm, Douglas Gardens, Uddingston.
1887, Oct. 25:	James Brown Wyllie,	Engineers' Office, Loch Dhu Cottage, Kinlochard, by Aberfoyle.
1890, Jan. 21:	A. Scott Younger,	———

DECEASED DURING THE SESSION.

Honorary Member.

Professor John	Tyndall, D.C.L., LL.D., F.R.S.,	Haslemere.

Members.

David	Henderson,	Glasgow.
James	Reid,	Glasgow.

Associates.

Sir Archibald Orr	Ewing, Bart.,	Glasgow.
John	Morgan,	Glasgow.
William M'Ivor	Morrison,	Rothesay.

INDEX.

PAGE

Accumulators, - - - - - - - - - 151
Additions to Library, - - - - - - - 199
Address, Introductory—by the President, - - - - 1
Prosperity of the Institution, - - - - - 1
Deceased Members, - - - - - - - 2
Early Atlantic Steam Navigation, - - - - - 4
Subsidies for Mail Service, - - - - - - 5
Commercial Results of Fast Steam Service, - - - 7
Warships, - - - - - - - - - 11
Losses at Sea, - - - - - - - - 12
Yachting, and the "America" Cup, - - - - 14
Relations of Employer and Workmen, - - - - 15
Future of Engineering and Shipbuilding, - - - - 22
Atlantic Steam Navigation, - - - - - 4, 46, 49, 53
Automatic Adjustments for Bearings—by Mr W. A. M'William, - 121
High Speed Engines, - - - - - - - 121
Methods of Obtaining Quiet Running, - - - - 121
Description of Automatic Adjustment, - - - - 122
Discussion, - - - - - - - - - 126

Books Added to Library, - - - - - - - 201
Boring Tools, - - - - - - - - - 28, 33
Buoyancy, - - - - - - - - - 39

Caulking Tools, - - - - - - - - 25, 30, 33
Collisions at Sea, - - - - - - - 77, 79, 80
Commercial Results of Fast Steam Service, - - - - 7
Companies—Steamship, - - - - - - - 9
Comparative Cost of Gas and Electric Light, - - - 159, 174
Compressed Air for Tools, - - - - - - 28, 36
Cost of Electric Light, - - - - - - 159, 163, 166
Curve of Buoyancy, - - - - - - - - 39

Deceased Members, - - - - - - - 2, 195

PAGE

Discussion of Papers—

Remarks by: Mr W. D. Archer—Strength of Ships, 60.—Mr William Arnot—Electric Lighting, 175.—Captain John Bain —Effect of Reversing the Screw upon the Steering, 80, 83.—Mr John Barr—Caulking and Chipping Tools, 30; Power of Steam Engines, 109; Life of Driving Ropes, 138; Efficiency of Cranes, 139.—Professor Barr—Elastic Limit of Stress, 67; Rotatory Engines, 108; Measurement of Moisture in Steam, 112, 113.—Mr A. S. Biggart—Stresses on Ship and Bridge Work, 67; Cost of Electric Lighting, 159.—Professor Biles—Strength of Ships, 70.—Mr Henry Brier—Caulking and Chipping Tools, 31.—Mr Thomas Burt—Overhead Travelling Crane, 137.—Mr E. G. Carey—Strain Indicator, 63; Automatic Adjustments for Bearings, 126.—Mr Sinclair Cooper—Caulking and Chipping Tools, 32; Overhead Travelling Crane, 135, 139.—Mr Archibald Denny—Strength of Ships, 65, 69.—Mr Robert Dundas—President's Address, 23. Mr D. J. Dunlop—Strength of Ships, 68; Overhead Travelling Crane, 140.—Mr E. P. Hetherington—Overhead Travelling Crane, 141.—Mr John Inglis (President)—Caulking and Chipping Tools, 36; Strength of Ships, 72; Effect of Reversing the Screw Propeller on the Steering, 80; Overhead Travelling Crane, 140; Electric Lighting, 154.—Professor Andrew Jamieson—Caulking and Chipping Tools, 33; Rotatory Engines, 104; Electrical Transmission of Power, 110; Electric Lighting, 158, 170.—Mr Rankin Kennedy—Electric Lighting, 169.—Mr William M'Whirter—Rotatory Engines, 106; Electric Lighting, 159.—Mr W. A. M'William —Automatic Adjustments for Bearings, 127, 128.—Mr Henry A. Mavor—Caulking and Chipping Tools, 31, 32; Electric Lighting, 155, 164.—Mr S. Mavor—Electric Lighting, 168.—Mr James Mollison—Effect of Reversing the Screw upon the Steering, 81, 82.—Mr Alexander Morton—Rotatory Engines, 113, 114.—Mr Angus Murray—Rotatory Engines, 108.—Mr Henry M. Napier—Caulking and Chipping Tools, 30.—Mr R. T. Napier—Strength of Ships, 64.—Mr F. P. Purvis—Strength of Ships, 55.—Mr James Richmond—Effect of Reversing the Screw upon the Steering, 81.—Mr J. M'E. Ross—Caulking and Chipping Tools, 35.—Mr George Russell —Rotatory Engings, 106; Automatic Adjustments for Bearings, 128; Overhead Travelling Crane, 135, 137, 138, 140,

PAGE

141, 143.—Mr Alexander E. Stephen—Caulking and Chipping Tools, 31.—Mr C. E. Stromeyer — Caulking and Chipping Tools, 32; Strength of Ships, 57; Strain Indicator, 61; Elastic Limit of Stress, 68; Effect of Reversing the Screw upon the Steering, 83; Measurement of Moisture in Steam, 111, 112, 113.—Mr John Thom—Vibration in Steam Ships, 60; Effect of Reversing the Screw upon the Steering, 82; Rotatory Engines, 107.—Mr W. R. M. Thomson—Effect of Reversing the Screw upon the Steering, 82; Overhead Travelling Crane, 135.—Mr W. Carlile Wallace—Overhead Travelling Crane, 142.

Donations to Library, - - - - - - - 199
Dynamos, - - - - - - - - 148

Effect of Reversing the Screw Propeller of a Steamship upon the Steering—by Captain John Bain, - - - - 75
Results from Actual Experience, - - - - - 75
Experiments made, - - - - - - 77, 78, 86
Articles and Papers on the Subject, - - - - 77
"Victoria" Disaster and other Collisions, - - 77, 79, 80
Discussion, - - - - - - - - 80
Electric Current—Alternating, - - - - - 145, 156, 170
,, ,, —Continuous, - - - - - 145, 156, 170
,, Insulation, - - - - - - - 152
,, Lighting, - - - - - - - 145
,, Switchboard, - - - - - 151, 157, 171, 176
Engineering—Future of, - - - - - - - 22
Engines—High Speed, - - - - - - - 121
,, —Efficiency of, - - - - - - - 102

Faults in Electric Wires, - - - - - - 154
Flow of Fluids, - - - - - - - - 95

Graduate Section, - - - - - - - 1

High Speed Engines, - - - - - - 121, 147, 168

Institution—Library of, - - - - - - - 204
,, —List of Members of the, - - - - - 207
,, —List of Presidents of the, - - - - - - iv

PAGE

Institution—Papers read before the, - 1, 25, 39, 75, 91, 121, 131, 145
,, —Prosperity of the, - - - - - - 1
Instrument for Measuring Strains, - - - - 58, 61, 65

James Watt Anniversary Dinner, - - - - - 184

Lardner, Dr, on Steam Navigation, - - - - 4, 9
Library—Books added to, - - - - - - 201
,, —Committee's Report, - - - - - - 199
,, —Donations, - - - - - - - 199
,, of the Institution, - - - - - - 204
,, —Recommendation Book, - - - - - 204
Losses at Sea, - - - - - - - - 12

Members—Deceased, - - - - - - - 195
,, —List of, - - - - - - - 207
Minutes of Proceedings, - - - - - - - 179

Navigation—Atlantic Steam, - - - - - - 4
New Books added to Library, - - - - - - 201

Office-Bearers, - - - - - - - - iii
Overhead Power Travelling Crane—by Mr George Russell, - - 131
Transmission of Power, - - - - - - 131
Flexible Steel Ropes, - - - - - - 132
Description of Crane, - - - - - - 133
Discussion, - - - - - - - - 135

Papers Read—
President's Address, - - - - - - - 1
A Percussive Tool for Caulking, Chipping, Mining, etc., - 25
The Strength of Large Ships, - - - - - 39
The Effect of Reversing the Screw Propeller of a Steamship upon the Steering, - - - - - - - 75
Rotatory and Re-action Engines, - - - - - 91
Automatic Adjustments for Bearings, - - - - 121
An Overhead Power Travelling Crane, - - - - 131
The Glasgow Corporation Electric Light Supply, - - 145

PAGE

Percussive Tool for Caulking, Chipping, Mining, etc. — by Mr J. MacEwan Ross, - - - - - - - 25
Tool Worked by Compressed Air, - - - - - 25
Principle of Working, - - - - - - 27
Tool Worked by Steam, - - - - - - 28
Discussion, - - - - - - - 30
Premiums for Papers, - - - - - - - vii
Presidents of the Institution, - - - - - - iv
Proceedings—Minutes of, - - - - - - 179

Re-action of Steam, - - - - - - - 91, 115
Relations of Employer and Workmen, - - - - - 15
Rock Boring Tools, - - - - - - - 28, 33
Ropes—Wire, - - - - - - - 132, 142
Rotatory and Re-action Engines—by Mr Alexander Morton, - - 91
Early Forms of Rotatory Engines, - - - - - 91
Application to Steamships, - - - - - - 94
Flow of Fluids, - - - - - - - 95
Re-action Experiments, - - - - - 95, 100
Description of New Form of Rotatory Engine, - - - 96
Efficiency of Engine, - - - - - - 102
Discussion, - - - - - - - 104
Rotatory Engines of Paddle Steamers, - - - - 94, 119

Screw Propeller—Reversing of, - - - - - - 75
Sea—Losses at, - - - - - - - 12
,, —Collisions at, - - - - - 75, 77, 79, 80
Shipbuilding—Future of, - - - - - - 22
Steam Boilers, - - - - - - - 146
,, Engines, - - - - - - 147, 158, 168
,, Service—Fast, - - - - - - 7
Strength of Large Ships—by Professor J. Harvard Biles, - - 39
Stresses in Large and Small Ships, - - - - - 39
Distribution of Buoyancy, - - - - - - 39
Curve of Supporting Forces, - - - - - 39
Distribution of Weight, - - - - - - 40
Curve of Weight, - - - - - - - 40
Stresses when at Rest and in Motion, - - - - 40
Trochoidal Wave Form, - - - - - - 41
Wave Pressures, - - - - - - - 41
Wave Lengths, - - - - - - - 41, 43

PAGE

Strength of Large Ships—by Professor J. Harvard Biles (continued)—
Curves of Shearing Forces and Bending Moments, - - 44
Comparison of Strength of Vessels of Different Length, - - 46
Maximum Stress in a Large Ship, - - - - - 52
Discussion, - - - - - - - - 55
Stresses in Large Ships, - - - - - - - 39
Stresses—Instrument for Measuring, - - - - 58, 61, 63
Subsidies for Mail Service, - - - - - - 5
Switchboard for Electric Lighting, - - - 151, 157, 171, 176

The Glasgow Corporation Electric Light Supply—by Mr William Arnot, A.M.Inst.C.E., - - - - - - - 145
Origin of Scheme, - - - - - - - - 145
Boilers, - - - - - - - - - 146
Engines, - - - - - - - - - 147
Dynamos, - - - - - - - - - 148
Accumulators, - - - - - - - - 151
Distribution, - - - - - - - - 151
Discussion, - - - - - - - - - 154
Tool—Percussive Caulking, - - - - - - - 25
Travelling Crane, - - - - - - - - 131
Trochoidal Wave Form, - - - - - - - - 41, 42

"Victoria" Disaster, - - - - - - - - 80

Warships, - - - - - - - - - 11
Wave Forms, - - - - - - - - - 41
,, Lengths, - - - - - - - - - 41, 43
,, Pressures, - - - - - - - - - 41
,, Speeds, - - - - - - - - - 41, 42
Willan's Steam Engine, - - - - - - - 147, 166
Wire Ropes, - - - - - - - 132, 138, 139, 142

Yachting, and the "America" Cup, - - - - - - 14

William Asher, Printer, 80 Gordon Street, Glasgow.

E STRENGTH

PLATE I

CORRECTED FOR M

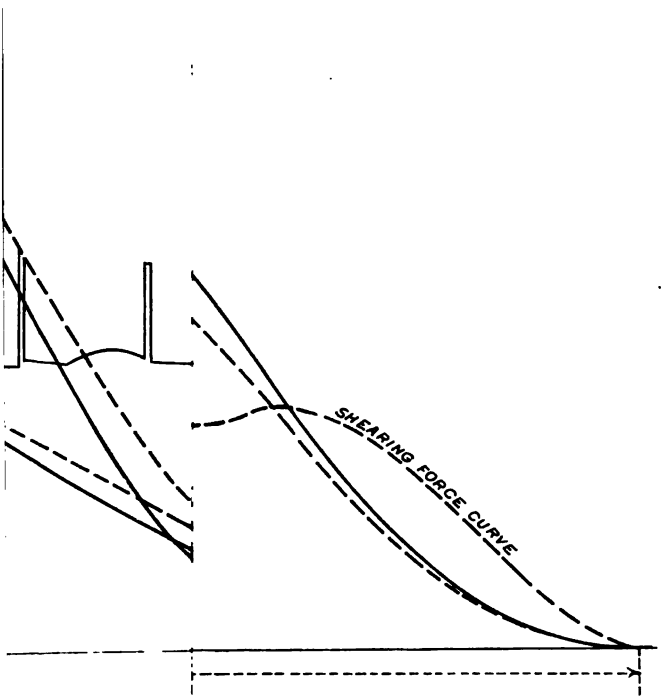

ROBERT GARDNER & CO.
ENGINEERING LITHOGRAPHERS, GLASGOW

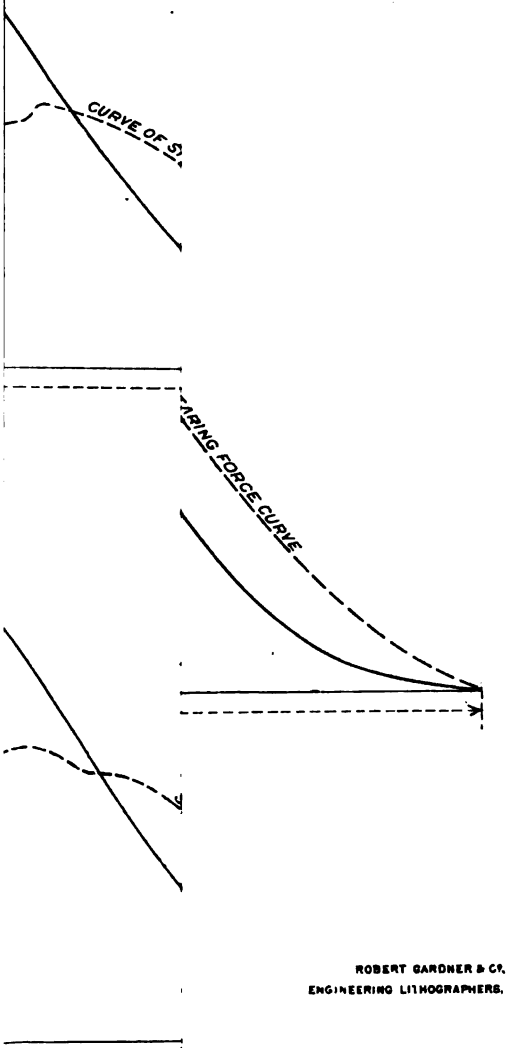

ROBERT GARDNER & Cº.
ENGINEERING LITHOGRAPHERS, GLASGOW